CARROLL SCHOOL

45 Waltham Road

in

Wayland, Massachusetts

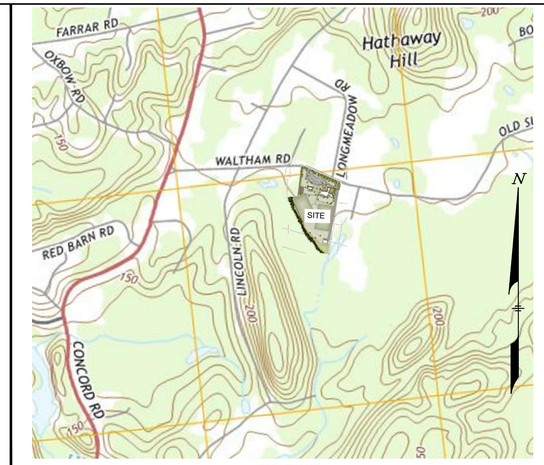

VICINITY MAP
SCALE 1"=1000'

PREPARED FOR

Carroll School

25 Baker Bridge Road
Lincoln, Massachusetts 01778

SHEET INDEX

SHEET NO.	DESCRIPTION
T-100	TITLE SHEET
C-001	EXISTING CONDITIONS PLAN
C-002	PROPOSED SITE LAYOUT PLAN
C-003	GRADING DRAINAGE AND EROSION CONTROL PLAN
C-004	EROSION CONTROL NOTES AND DETAILS
C-005	SITE DETAILS PLAN
C-006	SITE DETAILS PLAN
C-007	SITE CIRCULATION PLAN
L101	MATERIALS PLAN
L102	LANDSCAPE PLAN
DR-001	PRE-DEVELOPMENT SUBCATCHMENT PLAN
DR-002	POST-DEVELOPMENT SUBCATCHMENT PLAN

COMMONWEALTH OF MASSACHUSETTS
SEAN P. MALONE
CIVIL
No. 48204
6-27-16

Carroll School

25 Baker Bridge Road
Lincoln MA 01773

39/45 Waltham Road
Wayland MA 01778

Oak Consulting Group
CIVIL ENGINEER
978.312.3120

Brown|Sardina, Inc.
LANDSCAPE ARCHITECT
617.482.4703

Allied Consulting Services, Inc
MEPFP ENGINEER
978.443.7888

SCHLESINGER AND BUCHBINDER
PROJECT ATTORNEY
617.965.3500

DSK Dewing Schmid Kearns
ARCHITECTS + PLANNERS

Suite 200B
30 Monument Square
Concord, MA 01742
978.371.7500

280 Elm Street
South Dartmouth
MA 02748
508.999.0440

www.dskap.com

SITE PLAN SUBMISSION

NO.	DATE	REVISION	BY

NO.	DATE	ISSUED TO	BY

TITLE

TITLE SHEET

DATE	6/27/16
SCALE	AS SHOWN
JOB NO.	16011
DRAWN BY	SPM

T-001

EXISTING CONDITIONS NOTES:

1. EXISTING CONDITIONS BASED ON ON THE GROUND TOPOGRAPHIC SURVEY BY STAMSKI AND MCNARY IN THE SPRING OF 2016.
2. THE VERTICAL DATUM SHOWN IS NAVD88
3. PORTIONS OF THE PROJECT AREA ARE WITHIN A FEMA FLOOD □ONE X TAKEN FROM FEMA FIRM MAP 25017C0389F□EFFECTIVE DATE JULY 7□ 2014.

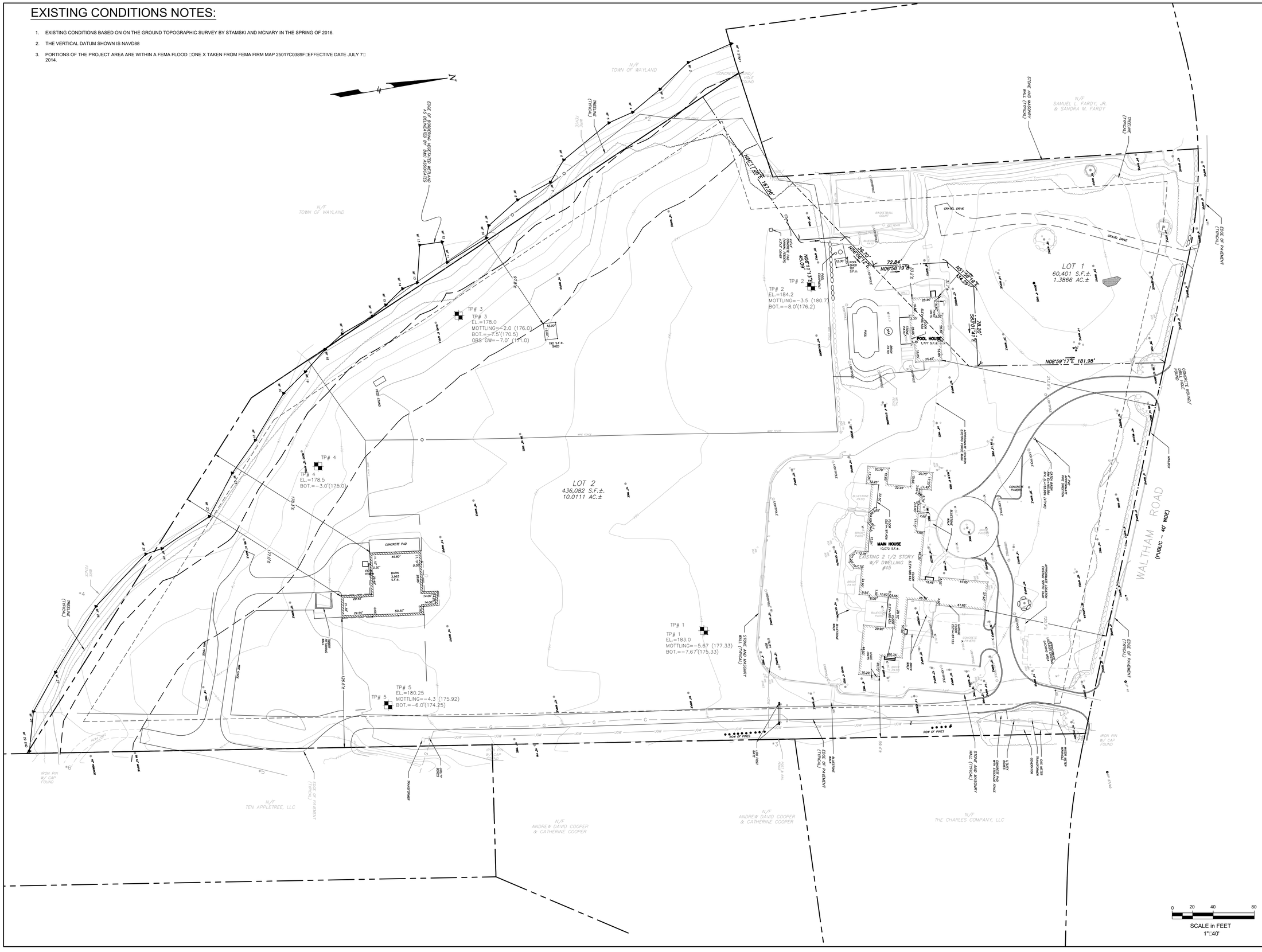

SEAN P. MALONE
CIVIL
No. 48204
6-27-16

Carroll School

25 Baker Bridge Road
Lincoln MA 01773

39/45 Waltham Road
Wayland MA 01778

Oak Consulting Group
CIVIL ENGINEER
978.312.3120

Brown|Sardina, Inc.
LANDSCAPE ARCHITECT
617.482.4703

Allied Consulting Services, Inc
MEPFP ENGINEER
978.443.7888

SCHLESINGER AND BUCHBINDER
PROJECT ATTORNEY
617.965.3500

DSK Dewing Schmid Kearns
ARCHITECTS + PLANNERS

Suite 200B
30 Monument Square
Concord, MA 01742
978.371.7500

280 Elm Street
South Dartmouth
MA 02748
508.999.0440

www.dskap.com

SITE PLAN SUBMISSION

NO.	DATE	REVISION	BY

NO.	DATE	ISSUED TO	BY

TITLE

EXISTING CONDITIONS PLAN

DATE	6/27/16
SCALE	AS SHOWN
JOB NO.	16011
DRAWN BY	SPM

C-001

SITE NOTES:

1. ALL MATERIALS AND CONSTRUCTION SHALL CONFORM WITH APPLICABLE TOWN□STATE□ AND FEDERAL CODES.
2. STRIPE SITE AS SHOWN. PARKING STALLS□STRIPED ISLANDS□DIRECTION ARROWS□AND LANE LINES SHALL BE PAINTED WITH WHITE TRAFFIC PAINT. ALL TRAFFIC PAINT SHALL MEET THE RE□UIREMENTS OF AASHTO M248□TYPE "N".
3. ALL PAVEMENT MARKINGS AND SIGNS TO CONFORM TO MASSACHUSETTS DEPARTMENT OF TRANSPORTATION STANDARD SPECIFICATIONS FOR ROAD AND BRIDGE CONSTRUCTION AND "MANUAL ON UNIFORM TRAFFIC CONTROL DEVICES" AND "STANDARD ALPHABETS FOR HIGHWAY SIGNS AND PAVEMENT MARKINGS"□LATEST EDITIONS AND THE AMERICANS WITH DISABILITIES ACT RE□UIREMENTS UNLESS OTHERWISE SPECIFIED.
4. CLEAN AND COAT VERTICAL FACE OF PAVEMENT AT SAWCUT LINE WITH RS-1 EMULSION IMMEDIATELY PRIOR TO PLACING NEW BITUMINOUS CONCRETE.
5. THE CONTRACTOR SHALL BE RESPONSIBLE FOR DETERMINING ALL LAYOUT OF LINES AND GRADES.
6. THE CONTRACTOR SHALL PREPARE AND SUBMIT TO THE OWNER AND ENGINEER□AN AS-BUILT PLAN IN BOTH PAPER COPY AND ELECTRONIC COPY □DWG□FORM. THE AS-BUILT SHALL BE PREPARED BY A LICENSED ENGINEER OR SURVEYOR AND SHALL BE STAMPED AND CERTIFIED AS TO THE COMPLETENESS AND ACCURACY OF THE AS-BUILT.
7. COORDINATE CONSTRUCTION OF ALL SITE WALKS□STAIRS□WALLS□FENCING□ AND OTHER SITE IMPROVEMENTS WITH THE LANDSCAPE DRAWINGS.

UTILITIES NOTES:

1. THE CONTRACTOR SHALL CONTACT "DIGSAFE" 72 HOURS PRIOR TO COMMENCING CONSTRUCTION. THE CONTRACTOR SHALL HAVE THE "DIG-SAFE" NUMBER ON-SITE AT ALL TIMES.
2. THE LOCATION OF UNDERGROUND UTILITIES ARE APPROXIMATE AND THE LOCATION IS NOT GUARANTEED BY THE OWNER OR THE ENGINEER. IT IS THE CONTRACTOR'S RESPONSIBILITY TO LOCATE ALL UTILITIES□ANTICIPATE CONFLICTS□REPAIR EXISTING UTILITIES AND RELOCATE EXISTING UTILITIES RE□UIRED TO COMPLETE THE WORK. THE CONTRACTOR SHALL IMMEDIATELY NOTIFY THE ENGINEER OF ANY DISCREPENCIES BETWEEN THE PLANS AND FIELD CONDITIONS THAT MAY AFFECT THE COMPLETION OF WORK.
3. ALL ON-SITE UTILITIES SHALL BE INSTALLED UNDERGROUND□UNLESS OTHERWISE INDICATED.
4. ALL MATERIALS AND CONSTRUCTION SHALL CONFORM WITH APPLICABLE TOWN AND STATE CODES.
5. WATER LINES SHALL HAVE A MINIMUM OF 5' COVER OR PER LINCOLN WATER DEPARTMENT STANDARDS□WHICH EVER IS MORE STRINGENT.
6. UNLESS OTHERWISE INDICATED OR SPECIFIED□ALL WATER PIPE SHALL BE CEMENT LINED DUCTILE IRON PIPE□CLASS 52.
8. ALL WATER VALVES TO OPEN RIGHT PER LINCOLN WATER DEPARTMENT STANDARDS.
9. COORDINATE LEAKAGE AND DISINFECTION TESTING OF WATER CONSTRUCTION WITH LINCOLN WATER DEPARTMENT.
10. ALL WATER AND SEWER PIPES SHALL HAVE A MINIMUM 10' HORI□ONTAL SEPARATION. IF A WATER LINE CROSSES A SEWER LINE□THERE SHALL BE A MINIMUM 18" VERTICAL SEPARATION WITH THE SEWER UNDER THE WATER.
11. COORDINATE THE TIMING OF ALL UTILITY SHUTDOWNS WITH OWNER AND UTILITY SUPPLIER. CONSTRUCT NEW UTILITIES IN A MANNER TO MINIMI□E THE DURATION OF SHUTDOWNS AND DISRUPTION OF UTILITY SERVICES TO THE SCHOOL AND SURROUNDING PROPERTIES.

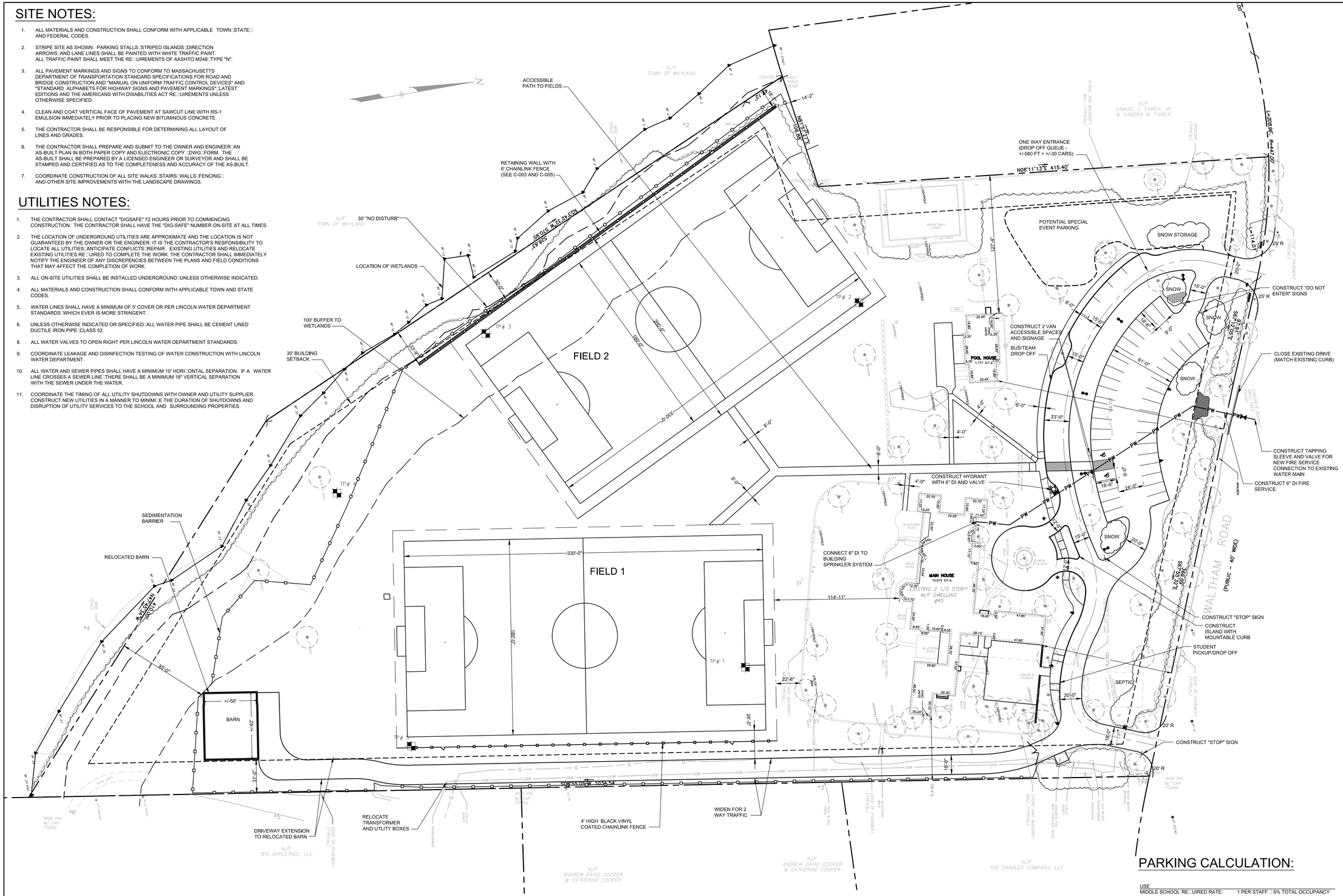

PARKING CALCULATION:

USE
MIDDLE SCHOOL RE□UIRED RATE: 1 PER STAFF □5% TOTAL OCCUPANCY

OCCUPANCY: 60 STUDENTS AND 40 STAFF □100 PERSONS TOTAL□

TOTAL PARKING RE□UIRED: 45 SPACES
TOTAL PARKING PROVIDED: 45 SPACES

HANDICAP ACCESSIBLE PARKING RE□UIRED □2 RE□UIRED FOR 26 TO 50 SPACES□
HANDICAP ACCESSIBLE PARKING PROVIDED □2

0 20 40 80
SCALE in FEET
1"□40'

□ONING COMPLIANCE CHECKLIST
SITE AND MAIN HOUSE

PROPERTY ID: 39 AND 45 WALTHAM ROAD□WAYLAND MASSACHUSETTS
□ONE: R-60
USE: EDUCATIONAL

	RE□UIRED	EXISTING	PROPOSED
LOT AREA	60,000 SF	496,483 SF □11.4AC□	NO CHANGE
MAX LOT COVERAGE	20%	3.3%	3.0%
LOT FRONTAGE	210 FT	581.6 FT	NO CHANGE
FRONT SETBACK	30 FT	120.7 FT	NO CHANGE
FRONT SETBACK FROM ROW	55 FT	140.7 FT	NO CHANGE
SIDE SETBACK	30 FT	59.4 FT	NO CHANGE
REAR SETBACK	30 FT	388.8 FT	NO CHANGE
BUILDING HEIGHT	35 FT	Ñ35 FT	NO CHANGE

□ONING COMPLIANCE CHECKLIST
POOL HOUSE

PROPERTY ID: 39 AND 45 WALTHAM ROAD□WAYLAND MASSACHUSETTS
□ONE: R-60
USE: EDUCATIONAL

	RE□UIRED	EXISTING	PROPOSED
FRONT SETBACK	30 FT	212.8 FT	NO CHANGE
FRONT SETBACK FROM ROW	55 FT	232.8 FT	NO CHANGE
SIDE SETBACK	30 FT	127.3 FT	NO CHANGE
REAR SETBACK	30 FT	288.1 FT	NO CHANGE
BUILDING HEIGHT	35 FT	Ñ25 FT	NO CHANGE

□ONING COMPLIANCE CHECKLIST
BARN

PROPERTY ID: 39 AND 45 WALTHAM ROAD□WAYLAND MASSACHUSETTS
□ONE: R-60
USE: EDUCATIONAL

	RE□UIRED	EXISTING	PROPOSED
FRONT SETBACK	30 FT	646.5 FT	818.8 FT
FRONT SETBACK FROM ROW	55 FT	666.5 FT	838.8 FT
SIDE SETBACK	30 FT	126.6 FT	31 FT
REAR SETBACK	30 FT	177 FT	85 FT
BUILDING HEIGHT	35 FT	Ñ30 FT	NO CHANGE

SEAN P. MALONE CIVIL No. 48204 — COMMONWEALTH OF MASSACHUSETTS — 6-30-16

Carroll School

25 Baker Bridge Road
Lincoln MA 01773

39/45 Waltham Road
Wayland MA 01778

Oak Consulting Group
CIVIL ENGINEER
978.312.3120

Brown|Sardina, Inc.
LANDSCAPE ARCHITECT
617.482.4703

Allied Consulting Services, Inc
MEPFP ENGINEER
978.443.7888

SCHLESINGER AND BUCHBINDER
PROJECT ATTORNEY
617.965.3500

DSK Dewing Schmid Kearns
ARCHITECTS + PLANNERS

Suite 200B
30 Monument Square
Concord, MA 01742
978.371.7500

280 Elm Street
South Dartmouth
MA 02748
508.999.0440

www.dskap.com

SITE PLAN SUBMISSION

NO.	DATE	REVISION	BY

NO.	DATE	ISSUED TO	BY

TITLE

PROPOSED
SITE LAYOUT
PLAN

DATE	6/27/16
SCALE	AS SHOWN
JOB NO.	16011
DRAWN BY	SPM

C-002

GRADING NOTES:

1. ALL DISTURBED AREAS NOT OTHERWISE TREATED SHALL RECEIVE 4" SCREENED LOAM□HYDROSEED □ FERTILI□ER, COORDINATE WITH LANDSCAPE DRAWINGS.
2. ALL STORM DRAIN PIPE SHALL BE HIGH DENSITY POLYETHYLENE UNLESS OTHERWISE NOTED □HANCOR "HI□"□ ADS "N-12"□OR APPROVED E□UAL□.
3. ALL MATERIALS AND CONSTRUCTION SHALL CONFORM WITH APPLICABLE CITY AND STATE CODES.
4. ADJUST ALL MANHOLES□CATCHBASINS□CURB BOXES□ETC. WITHIN LIMITS OF WORK TO FINISH GRADE.
5. CONTRACTOR SHALL PROVIDE A FINISH PAVEMENT SURFACE FREE OF LOW SPOTS AND PONDING AREAS. CRITICAL AREAS INCLUDE BUILDING ENTRANCE AND EXIT RAMPS AND LOADING AREAS ADJACENT TO THE BUILDING.
6. ALL CATCHBASINS AND DRAIN LINES SHALL BE THOROUGHLY CLEANED OF ALL SEDIMENT AND DEBRIS AFTER THE UPSTREAM AREA IS STABILI□ED.
7. COORDINATE ALL GRADING WITH LANDSCAPE PLANS AND BUILDING DOOR ELEVATIONS WITH ARCHITECTURAL PLANS.

COMPACTION RE□UIREMENTS

LOCATION	MINIMUM DENSITY□
BELOW PAVED OR CONCRETE AREAS	95%
TRENCH BEDDING MATERIAL AND SAND BLANKET BACKFILL	95%
BELOW LOAM AND SEED AREAS	90%

□ALL PERCENTAGES SHALL BE OF THE MAXIMUM DRY DENSITY AT THE OPTIMUM MOISTURE CONTENT AS DETERMINED AND CONTROLLED IN ACCORDANCE WITH AASHTO STANDARD 180□ METHOD C. FIELD DENSITY TESTS SHALL BE MADE IN ACCORDANCE WITH AASHTO STANDARD T-191□T-204□OR T-238 AND T-239.

EROSION CONTROL NOTES:

1. SEE EROSION CONTROL NOTES □ DETAILS FOR ADDITIONAL EROSION CONTROL PROCEDURES AND CONSTRUCTION SE□UENCING.
2. PROVIDE INLET PROTECTION BARRIERS AROUND EXISTING STORM DRAINAGE INLETS WITHIN AND IMMEDIATELY DOWN GRADIENT OF THE WORK LIMITS AND AS SHOWN ON PLAN. MAINTAIN FOR THE DURATION OF THE PROJECT UNTIL PAVEMENT HAS BEEN INSTALLED AND UPSTREAM AREAS HAVE BEEN STABILI□ED.
3. CONTRACTOR SHALL BE RESPONSIBLE FOR UPKEEP□MAINTENANCE AND REPLACEMENT □IF RE□UIRED□OF ALL EROSION CONTROL MEASURES. CONTRACTOR SHALL REPAIR AND□OR REPLACE EROSION CONTROL MEASURES AS NEEDED.
4. ALL TEMPORARY LOAM STOCKPILES SHALL RECEIVE TEMPORARY EROSION CONTROL MEASURES.
5. CONSTRUCT STABILI□ED CONSTRUCTION ENTRANCES AT ALL EGRESS TO WORK AREAS.

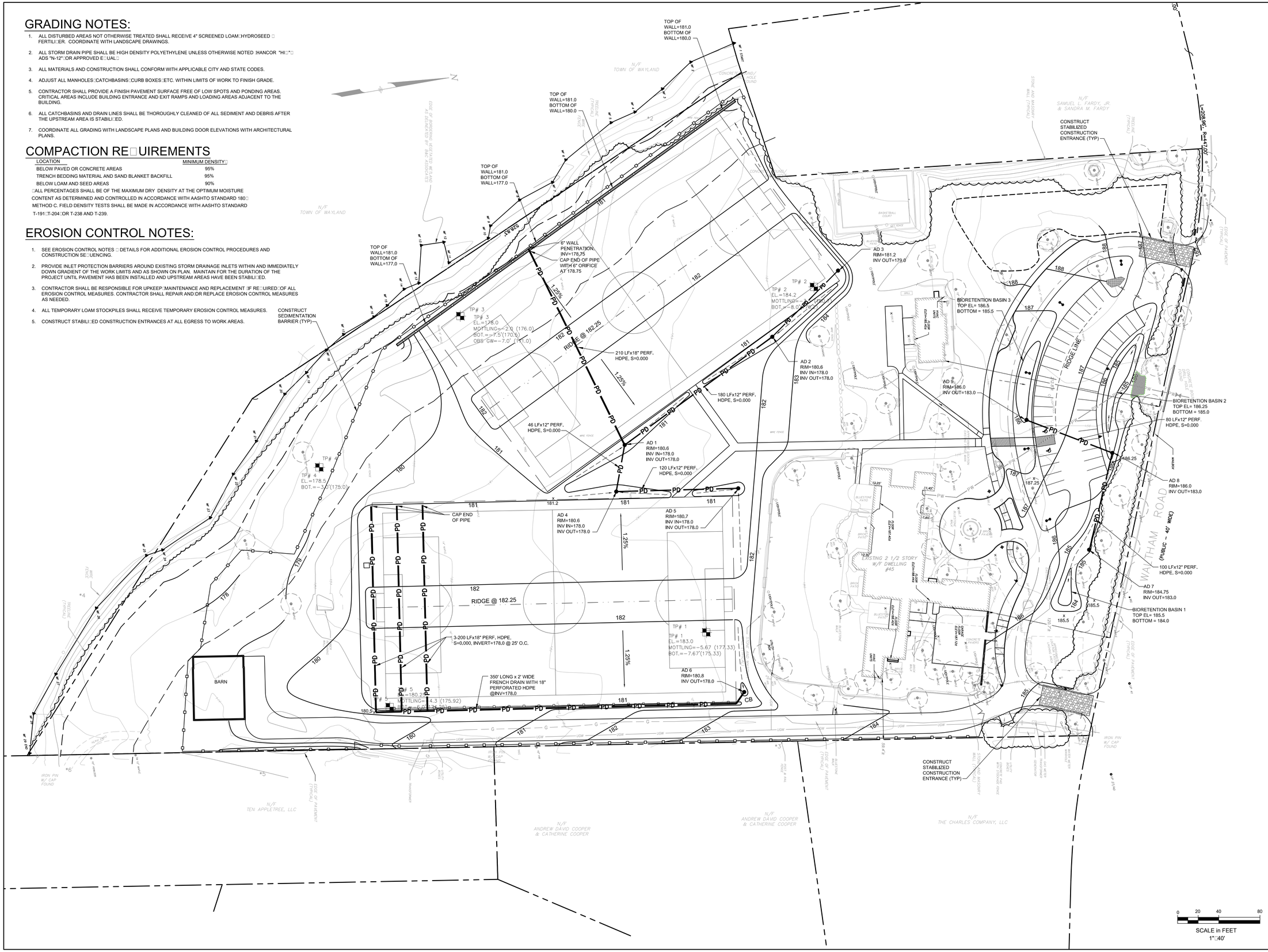

SEAN P. MALONE CIVIL No. 48204 6-27-16

Carroll School

25 Baker Bridge Road
Lincoln MA 01773

39/45 Waltham Road
Wayland MA 01778

Oak Consulting Group
CIVIL ENGINEER
978.312.3120

Brown|Sardina, Inc.
LANDSCAPE ARCHITECT
617.482.4703

Allied Consulting Services, Inc
MEPFP ENGINEER
978.443.7888

SCHLESINGER AND BUCHBINDER
PROJECT ATTORNEY
617.965.3500

DSK Dewing Schmid Kearns
ARCHITECTS + PLANNERS

Suite 200B
30 Monument Square
Concord, MA 01742
978.371.7500

280 Elm Street
South Dartmouth
MA 02748
508.999.0440

www.dskap.com

SITE PLAN SUBMISSION

NO.	DATE	REVISION	BY

NO.	DATE	ISSUED TO	BY

TITLE

GRADING, DRAINAGE AND EROSION CONTROL PLAN

DATE	6/27/16
SCALE	AS SHOWN
JOB NO.	16011
DRAWN BY	SPM

C-003

PROJECT NAME AND LOCATION

CARROLL SCHOOL
45 WALTHAM ROAD
WAYLAND, MA

LAT: 42°40'00"N
LON: 71°33'45"W

DESCRIPTION

THE PROJECT CONSISTS OF COVERTING A RESIDENTIAL PROPERTY TO A SCHOOL USE. WORK INCLUDES NEW PARKING, DRIVES, DRAINAGE, LANDSCAPING AND CONSTRUCTING PLAYING FIELDS ON LAND PREVIOUSLY USED AS PASTURE LAND.

SOIL CHARACTERISTICS

EXISTING SITE SOILS ARE COMPRISED OF A SILTY LOAM TOP SOIL OVER FINE SANDS AND COARSE SANDS.

DISTURBED AREA

THE TOTAL AREA TO BE DISTURBED IS APPROXIMATELY ±8 ACRES.

SEQUENCE OF MAJOR ACTIVITIES

1. INSTALL EROSION CONTROLS. CLEAR AND GRUB SITE.
2. STRIP AND STOCKPILE SOILS.
3. ROUGH GRADE SITE.
4. CONSTRUCT DRAINAGE AND PARKING AREAS.
5. CONSTRUCT PLAYING FIELDS
6. REMOVE EROSION CONTROLS.

EROSION AND SEDIMENT CONTROLS AND STABILIZATION PRACTICES

THE CONTRACTOR SHALL BE RESPONSIBLE FOR IMPLEMENTING EROSION CONTROL BEST MANAGEMENT PRACTICES AS NEEDED TO PREVENT EROSION AND SEDIMENTATION IMPACTS WITHIN AND ADJACENT TO THE LIMITS OF WORK.

STABILIZATION: AN AREA SHALL BE CONSIDERED STABILIZED WHEN ONCE ONE OF THE FOLLOWING HAS OCCURRED:

1. A MINIMUM OF 85% VEGETATIVE GROWTH HAS BEEN ESTABLISHED;
2. A MINIMUM OF 3à OF NON-EROSIVE MATERIAL SUCH AS STONE OR RIP-RAP HAS BEEN INSTALLED; OR
3. EROSION CONTROL BLANKETS HAVE BEEN PROPERLY INSTALLED.

STABILIZATION SHALL BE INITIATED ON ALL LOAM STOCKPILES AND DISTURBED AREAS WHERE CONSTRUCTION ACTIVITY WILL NOT OCCUR FOR MORE THAN THIRTY (30) CALENDAR DAYS BY THE FOURTEENTH (14TH) DAY AFTER CONSTRUCTION ACTIVITY HAS PERMANENTLY OR TEMPORARILY CEASED IN THAT AREA. ALL DISTURBED AREAS SHALL BE STABILIZED WITHIN 60 DAYS OF INITIAL DISTURBANCE. ALL CUT AND FILL SLOPES AND ROADWAYS SHALL BE STABILIZED WITHIN 72 HOURS OF ACHIEVING GRADE. STABILIZATION MEASURES TO BE USED INCLUDE:

1. TEMPORARY SEEDING;
2. MULCHING;
3. STONE RIP-RAP; OR
4. JUTE MATTING.

DURING CONSTRUCTION, RUNOFF SHALL BE DIVERTED AROUND THE SITE WITH EARTH DIKES, PIPING OR STABILIZED CHANNELS WHERE POSSIBLE. SHEET RUNOFF FROM THE SITE SHALL BE FILTERED THROUGH HAY BALE BARRIERS AND/OR SILT FENCES. ALL STORM DRAIN INLETS SHALL BE PROVIDED WITH BARRIER FILTERS.

OFF-SITE VEHICLE TRACKING

STABILIZED CONSTRUCTION ENTRANCES SHALL BE INSTALLED AT ALL EGRESSES TO THE ACTIVE WORK AREAS ON THE SITE AND MAINTAINED FOR THE DURATION OF CONSTRUCTION.

TIMING OF CONTROLS/MEASURES

AS INDICATED IN THE SEQUENCE OF MAJOR ACTIVITIES THE EROSION AND SEDIMENT BARRIERS SHALL BE INSTALLED PRIOR TO COMMENCING ANY CLEARING OR GRADING OF THE SITE. STRUCTURAL CONTROLS SHALL BE INSTALLED CONCURRENTLY WITH THE APPLICABLE ACTIVITY. AREAS WHERE CONSTRUCTION ACTIVITY TEMPORARILY CEASES FOR MORE THAN THIRTY (30) DAYS WILL BE STABILIZED WITH A TEMPORARY SEED AND MULCH WITHIN FOURTEEN (14) DAYS OF THE LAST DISTURBANCE. ONCE CONSTRUCTION ACTIVITY CEASES PERMANENTLY IN AN AREA, SILT FENCES AND HAY BALE BARRIERS AND ANY EARTH/DIKES WILL BE REMOVED ONCE PERMANENT MEASURES ARE ESTABLISHED.

INSTALLATION, MAINTENANCE AND INSPECTION PROCEDURES OF EROSION AND SEDIMENT CONTROLS

A. GENERAL – THE CONTRACTOR SHALL BE RESPONSIBLE FOR THE FOLLOWING:

INSPECTION

1. ALL CONTROL MEASURES WILL BE INSPECTED DAILY;
2. A MAINTENANCE INSPECTION REPORT WILL BE MADE WEEKLY; AND
3. THE CONTRACTOR'S SITE SUPERINTENDENT WILL BE RESPONSIBLE FOR INSPECTIONS, MAINTENANCE AND REPAIR ACTIVITIES AND FILLING OUT THE INSPECTION AND MAINTENANCE REPORT.

MAINTENANCE

1. STABILIZATION OF ALL SWALES, DITCHES IS REQUIRED PRIOR TO DIRECTING FLOW TO THEM.
2. ALL MEASURES WILL BE MAINTAINED IN GOOD WORKING ORDER; IF A REPAIR IS NECESSARY, IT WILL BE INITIATED WITHIN 24 HOURS OF REPORT.
3. BUILT UP SEDIMENT WILL BE REMOVED FROM SILT FENCE OR HAY BALE BARRIERS WHEN IT HAS REACHED ONE THIRD THE HEIGHT OF THE FENCE OR BALE.
4. ALL DIVERSION DIKES WILL BE INSPECTED AND ANY BREACHES PROMPTLY REPAIRED.
5. TEMPORARY SEEDING AND PLANTING WILL BE INSPECTED FOR BARE SPOTS, WASHOUTS, AND UNHEALTHY GROWTH.

B. SEDIMENTATION BARRIERS

1. PRODUCTS

SEDIMENTATION BARRIERS SHALL BE AS SPECIFIED ON THESE DRAWINGS AND PROJECT SPECIFICATIONS.

2. INSTALLATION

SEDIMENTATION BARRIERS SHALL BE INSTALLED PER MANUFACTURE'S SPECIFICATIONS AND RECOMMENDATIONS. SEDIMENTATION BARRIERS SHALL BE INSTALLED IN THE LOCATIONS SHOWN ON THE PLANS AND IN ALL OTHER LOCATIONS REQUIRED TO PREVENT THE MIGRATION OF SEDIMENT FROM THE ACTIVE CONSTRUCTION SITE.

3. SEQUENCE OF INSTALLATION

SEDIMENT BARRIERS SHALL BE INSTALLED PRIOR TO ANY SOIL DISTURBANCE OF THE CONTRIBUTING DRAINAGE AREA ABOVE THEM.

4. MAINTENANCE

SEDIMENTATION BARRIERS SHALL BE INSPECTED IMMEDIATELY AFTER EACH RAINFALL AND AT LEAST DAILY DURING PROLONGED RAINFALL. THEY SHALL BE REPAIRED IF THERE ARE ANY SIGNS OF EROSION OR SEDIMENTATION BELOW THEM. ANY REQUIRED REPAIRS SHALL BE MADE IMMEDIATELY. IF THERE ARE SIGNS OF UNDERCUTTING AT THE CENTER OR THE EDGES, OR IMPOUNDING OF LARGE VOLUMES OF WATER BEHIND THEM, SEDIMENT BARRIERS SHALL BE REPLACED WITH A TEMPORARY CHECK DAM.

SHOULD THE FABRIC ON A SEDIMENTATION BARRIER DECOMPOSE OR BECOME INEFFECTIVE PRIOR TO THE END OF THE EXPECTED USABLE LIFE AND THE BARRIER IS STILL NECESSARY, THE FABRIC SHALL BE REPLACED PROMPTLY.

SEDIMENT DEPOSITS SHOULD BE REMOVED AFTER EACH STORM EVENT. THEY MUST BE REMOVED WHEN DEPOSITS REACH APPROXIMATELY 1/3 THE HEIGHT OF THE BARRIER.

ANY SEDIMENT DEPOSITS REMAINING IN PLACE AFTER THE SEDIMENTATION BARRIER IS NO LONGER REQUIRED SHALL BE DRESSED TO CONFORM TO THE EXISTING GRADE, PREPARED AND SEEDED.

C. MULCHING

1. TIMING

IN ORDER FOR THE MULCH TO BE EFFECTIVE IT MUST BE IN PLACE PRIOR TO MAJOR STORM EVENTS. THERE ARE TWO TYPES OF STANDARDS WHICH SHALL BE USED:

APPLY MULCH PRIOR TO ANY STORM EVENT

THIS STANDARD IS APPLICABLE WHEN WORKING WITHIN 100 FEET OF WETLANDS. IT WILL BE NECESSARY TO CLOSELY MONITOR WEATHER PREDICTIONS, USUALLY BY CONTACTING THE NATIONAL WEATHER SERVICE TO HAVE ADEQUATE WARNING OF SIGNIFICANT STORMS.

REQUIRED MULCHING WITHIN A SPECIFIED TIME PERIOD

THE TIME PERIOD CAN RANGE FROM 14 TO 21 DAYS OF INACTIVITY ON AN AREA, THE LENGTH OF TIME VARYING WITH SITE CONDITIONS. PROFESSIONAL JUDGMENT SHALL BE USED TO EVALUATE THE INTERACTION OF SITE CONDITIONS (SOIL ERODIBILITY, SEASON OF YEAR, EXTENT OF DISTURBANCE, PROXIMITY TO SENSITIVE RESOURCES, ETC.) AND THE POTENTIAL IMPACT OF EROSION ON ADJACENT AREAS TO CHOOSE AN APPROPRIATE TIME RESTRICTION.

2. GUIDELINES FOR WINTER MULCH APPLICATION

WHEN MULCH IS APPLIED TO PROVIDE PROTECTION OVER THE WINTER (PAST THE GROWING SEASON) IT SHALL BE AT A RATE OF 6,000 POUNDS OF HAY OR STRAW PER ACRE. A TACKIFIER MAY BE ADDED TO THE MULCH.

3. MAINTENANCE

ALL MULCHES MUST BE INSPECTED PERIODICALLY, IN PARTICULAR AFTER RAIN STORMS, TO CHECK FOR RILL EROSION. IF LESS THAN 90% OF THE SOIL SURFACE IS COVERED BY MULCH, ADDITIONAL MULCH SHALL BE APPLIED.

D. VEGETATIVE PRACTICES

FOR PERMANENT MEASURES AND PLANTINGS FROM EARLY SPRING TO SEPTEMBER 30:

SEE FIELD CONSTRUCTION PLANS AND SPECIFICATIONS FOR METHODS AND MATERIALS TO BE USED FOR FIELD CONSTRUCTION AND TURF ESTABLISHMENT.

ALL AREAS DISTURBED BY CONSTRUCTION WITHIN THE PROPERTY LINES AND NOT COVERED BY STRUCTURES, PAVEMENT, OR MULCH SHALL BE LOAMED AND SEEDED.

THE SITE SUBCONTRACTOR SHALL PROTECT AND MAINTAIN THE SEEDED AREAS UNTIL ACCEPTED, INCLUDING CUTTING, AS SPECIFIED HEREIN AFTER UNDER MAINTENANCE AND PROTECTION.

STABILIZED CONSTRUCTION ENTRANCE

A. SPECIFICATIONS

1. AGGREGATE SIZE: USE TWO (2) INCHES STONE OR RECLAIMED OR RECYCLED CONCRETE EQUIVALENT
2. AGGREGATE THICKNESS: NOT LESS THAN SIX (6) INCHES.
3. WIDTH: TWELVE (12) FOOT MINIMUM, BUT NOT LESS THAN THE FULL WIDTH OF THE POINTS WHERE INGRESS OR EGRESS OCCURS.
4. LENGTH: AS REQUIRED BUT NOT LESS THAN 50 FEET.

B. MAINTENANCE

THE ENTRANCE SHALL BE MAINTAINED IN A CONDITION WHICH WILL PREVENT TRACKING OF SEDIMENT ONTO PUBLIC RIGHT-OF-WAY. WHEN WASHING IS REQUIRED, IT SHALL BE DONE ON AN AREA STABILIZED WITH AGGREGATE WHICH DRAINS INTO AN APPROVED SEDIMENT TRAPPING DEVICE. ALL SEDIMENT SHALL BE PREVENTED FROM ENTERING STORM DRAINS, DITCHES, OR WATERWAYS.

WASTE DISPOSAL

A. WASTE MATERIALS

ALL WASTE MATERIALS WILL BE COLLECTED AND STORED IN SECURELY LIDDED RECEPTACLES. ALL TRASH AND CONSTRUCTION DEBRIS FROM THE SITE WILL BE DEPOSITED IN A DUMPSTER. NO CONSTRUCTION WASTE MATERIALS WILL BE BURIED ON SITE. ALL PERSONNEL WILL BE INSTRUCTED REGARDING THE CORRECT PROCEDURE FOR WASTE DISPOSAL BY THE SUPERINTENDENT.

B. HAZARDOUS WASTE

ALL HAZARDOUS WASTE MATERIALS WILL BE DISPOSED OF IN THE MANNER SPECIFIED BY LOCAL OR STATE REGULATION OR BY THE MANUFACTURER. SITE PERSONNEL WILL BE INSTRUCTED IN THESE PRACTICES BY THE SUPERINTENDENT.

C. SANITARY WASTE

ALL SANITARY WASTE WILL BE COLLECTED FROM THE PORTABLE UNITS A MINIMUM OF ONCE PER WEEK BY A LICENSED SANITARY WASTE MANAGEMENT CONTRACTOR.

ADDITIONAL NOTES FOR WINTER CONSTRUCTION

A. ALL PROPOSED POST-DEVELOPMENT LANDSCAPED AREAS WHICH DO NOT EXHIBIT A MINIMUM OF 85% VEGETATIVE GROWTH BY NOVEMBER 15TH, OR WHICH ARE DISTURBED AFTER NOVEMBER 15TH, SHALL BE STABILIZED BY SEEDING AND INSTALLING EROSION CONTROL BLANKETS ON SLOPES GREATER THAN 4:1 AND SEEDING AND PLACING 3 TO 4 TONS OF MULCH PER ACRE, SECURED WITH ANCHORED NETTING, ELSEWHERE. THE PLACEMENT OF EROSION CONTROL BLANKETS OR MULCH AND NETTING SHALL NOT OCCUR OVER ACCUMULATED SNOW OR FROZEN GROUND.

B. ALL DITCHES OR SWALES WHICH DO NOT EXHIBIT A MINIMUM OF 85% VEGETATIVE GROWTH BY NOVEMBER 15TH, OR WHICH ARE DISTURBED AFTER NOVEMBER 15TH, SHALL BE STABILIZED WITH STONE OR EROSION CONTROL BLANKETS APPROPRIATE FOR THE DESIGN FLOW CONDITIONS.

C. AFTER NOVEMBER 15TH, ALL TRAVEL SURFACES SHALL BE PROTECTED WITH A MINIMUM OF 3-INCHES OF CRUSHED GRAVEL OR IF CONSTRUCTION IS TO CONTINUE THROUGH THE WINTER SEASON BE CLEARED OF ANY ACCUMULATED SNOWFALL AFTER EACH STORM EVENT

DUST CONTROL

THE CONTRACTOR SHALL BE RESPONSIBLE TO CONTROL DUST THROUGHOUT THE CONSTRUCTION PERIOD. DUST CONTROL METHODS SHALL INCLUDE, BUT NOT LIMITED TO SPRINKLING WATER ON EXPOSED AREAS, COVERING LOADED DUMP TRUCKS LEAVING THE SITE, AND TEMPORARY MULCHING. DUST CONTROL MEASURES SHALL BE UTILIZED SO AS TO PREVENT THE MIGRATION OF DUST FROM THE ACTIVE SITE TO ABUTTING AREAS.

NOTE ON SWPPP

SEE THE STORMWATER POLLUTION PREVENTION PLAN □SWPPP□PREPARED FOR THE PROJECT FOR ADDITIONAL EROSION AND SEDIMENTATION CONTROLS. IF THERE IS A CONFLICT BETWEEN THE SPECIFICATIONS LISTED AND THE SWPPP□THE MORE RESTRICTIVE OR CONSERVATIVE APPROACH SHALL BE APPLIED.

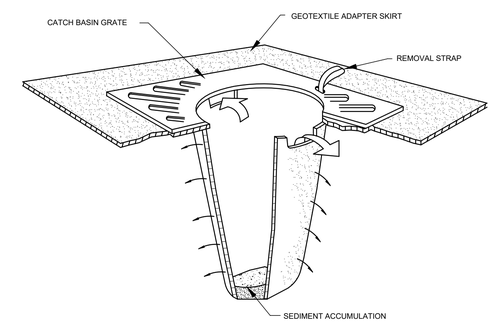

NOTES:

1. INLET PROTECTION TO BE "SILTSACK" BY ACF ENVIRONMENTAL□OR "STREAM GUARD" BY FOSS ENVIRONMENTAL SERVICES□OR E□UAL.
2. INSERT TO BE EMPTIED AND PROPERLY DISPOSED OF WHEN IT IS 1:2 FULL OF SEDIMENT.
3. INSPECT INSERT AFTER ALL RAINFALL EVENTS□REPAIR AND MAINTAIN AS RE□UIRED.
4. INSTALL INLET PROTECTION BARRIERS IN ALL EXISTING AND PROPOSED CATCH BASINS WITHIN AND IMMEDIATELY DOWN STREAM OF THE AREA OF WORK.

INLET PROTECTION BARRIER

NOT TO SCALE

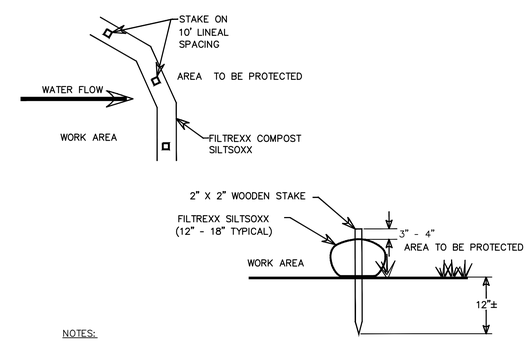

NOTES:

1. ALL MATERIAL TO MEET FILTREXX SPECIFICATIONS
2. SILTSOXX COMPOST□SOIL□ROCK□SEED FILL TO MEET APPLICATION RE□UIREMENTS.
3. SILTSOXX SHALL BE INSTALLED PERPENDICULAR TO THE SLOPE AND PER MANUFACTURER'S RECOMMENDATIONS
4. AFTER SITE IS STABILI□ED□SEDIMENTATION BARRIER AND ACCUMULATED SEDIMENT SHALL BE REMOVED. COMPOST MATERIAL TO BE DISPERSED ON SITE AS DETERMINED BY ENGINEER.

SEDIMENTATION BARRIER

NOT TO SCALE

Carroll School

25 Baker Bridge Road
Lincoln MA 01773

39/45 Waltham Road
Wayland MA 01778

Oak Consulting Group
CIVIL ENGINEER
978.312.3120

Brown|Sardina, Inc.
LANDSCAPE ARCHITECT
617.482.4703

Allied Consulting Services, Inc
MEPFP ENGINEER
978.443.7888

SCHLESINGER AND BUCHBINDER
PROJECT ATTORNEY
617.965.3500

DSK | Dewing Schmid Kearns
ARCHITECTS + PLANNERS

Suite 200B
30 Monument Square
Concord, MA 01742
978.371.7500

280 Elm Street
South Dartmouth
MA 02748
508.999.0440

www.dskap.com

SITE PLAN SUBMISSION

NO.	DATE	REVISION	BY

NO.	DATE	ISSUED TO	BY

TITLE

EROSION CONTROL
NOTES AND DETAILS

DATE	6/27/16
SCALE	AS SHOWN
JOB NO.	16011
DRAWN BY	SPM

C-004

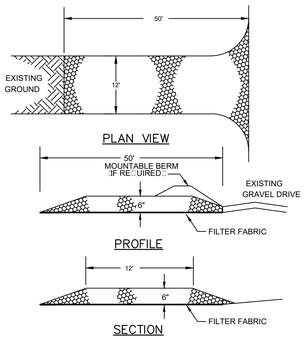

CONSTRUCTION SPECIFICATIONS

STONE SIZE - SEE GRADATION TABLE

LENGTH - 50 FOOT MINIMUM.

THICKNESS - SIX (6) INCHES (MINIMUM)

WIDTH - 12' MINIMUM

FILTER FABRIC - MIRAFI 600X OR APPROVED EQUAL

INSTALLATION - THE AREA OF THE ENTRANCE SHOULD BE CLEARED OF ALL VEGETATION, ROOTS AND OTHER OBJECTIONABLE MATERIAL. A ROAD STABILIZATION FILTER CLOTH CAN BE PLACED ON THE SUBGRADE PRIOR TO THE GRAVEL PLACEMENT TO PREVENT PUMPING. THE GRAVEL SHALL BE PLACED TO THE SPECIFIED DIMENSIONS.

MAINTENANCE - THE ENTRANCE SHALL BE MAINTAINED IN A CONDITION WHICH WILL PREVENT TRACKING OR FLOWING OF SEDIMENT ONTO PUBLIC RIGHTS-OF-WAY. THIS WILL REQUIRE PERIODIC TOP DRESSING WITH ADDITIONAL STONE OR ADDITIONAL LENGTH AS CONDITIONS DEMAND AND REPAIR AND/OR CLEANOUT OF ANY MEASURES USED TO TRAP SEDIMENT. ALL SEDIMENT SPILLED, DROPPED, WASHED OR TRACKED ONTO PUBLIC RIGHTS-OF-WAY MUST BE REMOVED IMMEDIATELY.

CRUSHED STONE GRADATION TABLE

SIEVE SIZE	% PASSING BY WEIGHT
2 inches	100
1 1/2 inches	90-100
1 inch	20-55
3/4 inch	0-15
3/8 inch	0-5

STABILIZED CONSTRUCTION ENTRANCE

NOT TO SCALE

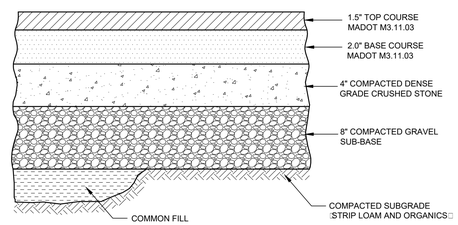

NOTE:
1. SEE SITE PLAN FOR PAVEMENT WIDTH AND LOCATION.
2. SEE GRADING PLAN FOR PAVEMENT SLOPE AND CROSS-SLOPE.
3. RECLAIMED ASPHALT PAVEMENT PAVEMENT MATERIAL MAY BE SUBSTITUTED FOR DENSE GRADE CRUSHED STONE AND GRAVEL SUB-BASE.

PAVEMENT SECTION

NOT TO SCALE

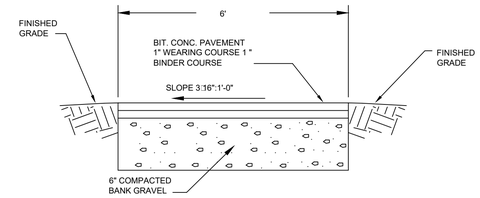

NOTE:
1. SLOPE SIDEWALK TOWARDS ROAD

BITUMINOUS SIDEWALK SECTION

NOT TO SCALE

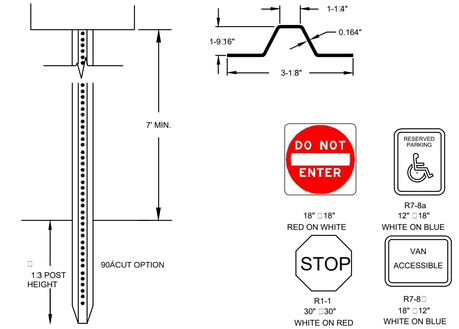

(1) IN LEDGE DRILL (2) GROUT TO A MIN OF 2'
(3) IN EARTH POSTS SHALL BE DRIVEN A MINIMUM OF 30" INTO UNDISTURBED SOIL.

NOTE:
ALL SIGNS TO BE INSTALLED AS INDICATED

LENGTH: AS REQUIRED
WEIGHT PER LINEAR FOOT: 2.50 LBS (MIN.)
HOLES: 3/8" DIAMETER, 1" C-C FULL LENGTH
STEEL: SHALL CONFORM TO ASTM A-499 (GRADE 60) OR ASTM A-576 (GRADE 1070 - 1080)
FINISH: SHALL BE PAINTED WITH TWO COATS OF AN APPROVED MEDIUM GREEN BAKED ON OR AIR DRIED, PAINT OF WEATHER RESISTANT QUALITY. ALL FABRICATION SHALL BE COMPLETE BEFORE PAINTING.

SIGN POST AND LEGEND

NOT TO SCALE

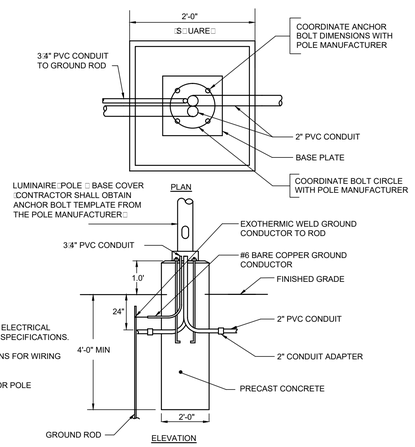

NOTES:
1. SEE LANDSCAPE AND SITE ELECTRICAL PLANS FOR LIGHT AND POLE SPECIFICATIONS.
2. SEE SITE ELECTRICAL PLANS FOR WIRING AND CONDUIT LOCATIONS.
3. SEE LANDSCAPE PLANS FOR POLE LOCATIONS.

TYPICAL LIGHTPOLE BASE

NOT TO SCALE

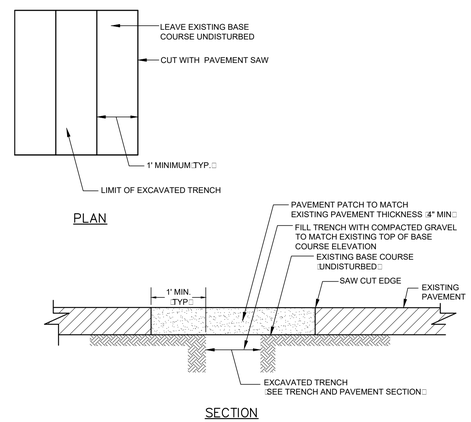

TRENCH PATCH

NOT TO SCALE

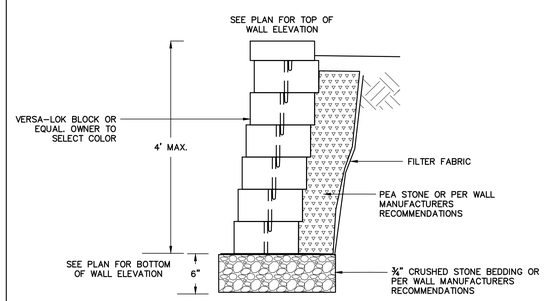

NOTES:
1. THE INTENT IS TO USE A MANUFACTURED PROPRIETARY WALL SYSTEM. THE CONTRACTOR SHALL SUPPLY A WALL DESIGN BY THE MANUFACTURER AND STAMPED BY A MASSACHUSETTS PROFESSIONAL ENGINEER PRIOR TO CONSTRUCTION.
2. WALLS OVER 2.5' TALL SHALL HAVE FALL PROTECTION FENCING

MODULAR BLOCK WALL

NOT TO SCALE

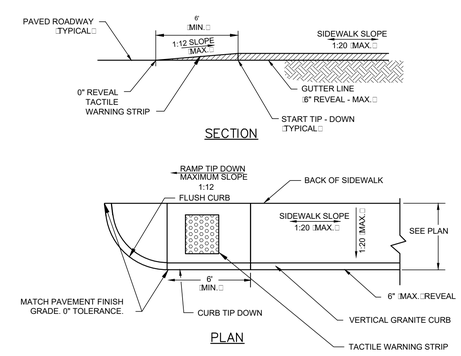

NOTES:
1. SEE PLAN FOR TIP DOWN RAMP AND SIDEWALK WIDTHS AND LOCATIONS.
2. COORDINATE SIDEWALKS ON SITE WITH LANDSCAPE DRAWINGS.

SIDEWALK END TIP DOWN RAMP

NOT TO SCALE

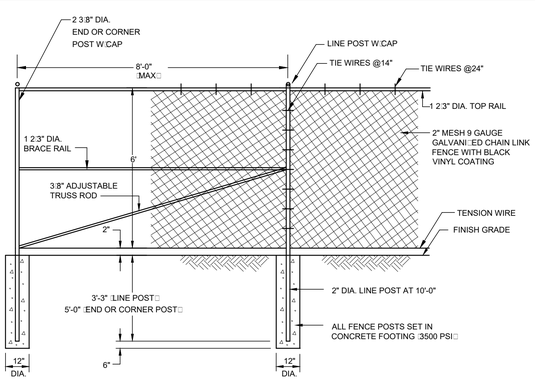

NOTES:
1. CORNER POSTS SHALL BE USED AT SHARP BREAKS IN GRADE AND CHANGES IN HORIZONTAL ALIGNMENT OF 15° OR MORE.
2. POSTS, BRACES AND RAILS SHALL BE GALVANIZED STEEL PAINTED BLACK.

TYPICAL FENCE

NOT TO SCALE

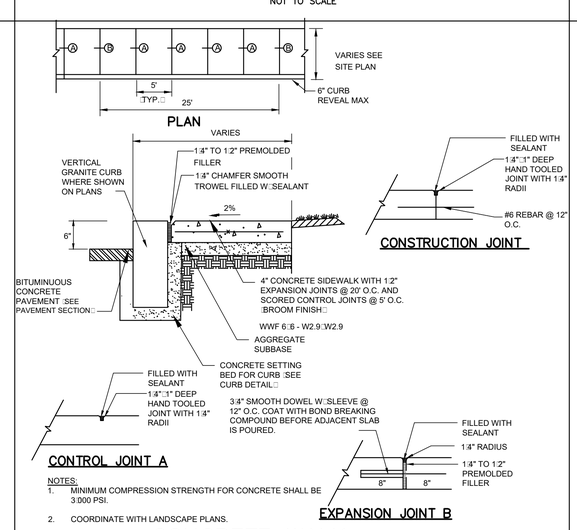

NOTES:
1. MINIMUM COMPRESSION STRENGTH FOR CONCRETE SHALL BE 3,000 PSI.
2. COORDINATE WITH LANDSCAPE PLANS.

CONCRETE WALK

NOT TO SCALE

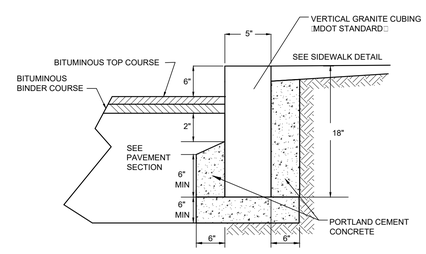

SECTION

NOTES:
1. CONCRETE TO BE 4,000 PSI.
2. ALL RADII 50' AND SMALLER TO BE CONSTRUCTED USING CURVED SECTIONS.

VERTICAL GRANITE CURBING

NOT TO SCALE

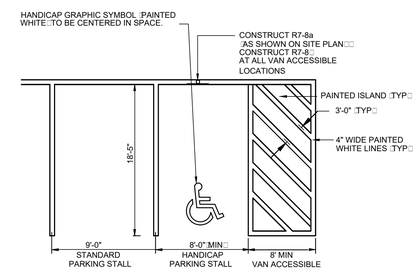

NOTE:
1. ALL PAINT SHALL BE FAST DRYING TRAFFIC PAINT, MEETING THE REQUIREMENTS OF AASHTO M248-TYPE N. PAINT SHALL BE APPLIED AS SPECIFIED BY MANUFACTURER.
2. SYMBOLS (2) PARKING STALLS SHALL CONFORM TO THE REQUIREMENTS OF THE AMERICAN WITH DISABILITIES ACT.

PARKING STALL STRIPING

NOT TO SCALE

COMMONWEALTH OF MASSACHUSETTS
SEAN P. MALONE
CIVIL
No. 48204
6-27-16

Carroll School

25 Baker Bridge Road
Lincoln MA 01773

39/45 Waltham Road
Wayland MA 01778

Oak Consulting Group
CIVIL ENGINEER
978.312.3120

Brown|Sardina, Inc.
LANDSCAPE ARCHITECT
617.482.4703

Allied Consulting Services, Inc
MEPFP ENGINEER
978.443.7888

SCHLESINGER AND BUCHBINDER
PROJECT ATTORNEY
617.965.3500

DSK Dewing Schmid Kearns
ARCHITECTS + PLANNERS

Suite 200B
30 Monument Square
Concord, MA 01742
978.371.7500

280 Elm Street
South Dartmouth
MA 02748
508.999.0440

www.dskap.com

SITE PLAN SUBMISSION

NO.	DATE	REVISION	BY

NO.	DATE	ISSUED TO	BY

TITLE

SITE DETAILS
PLAN

DATE	6/27/16
SCALE	AS SHOWN
JOB NO.	16011
DRAWN BY	SPM

C-005

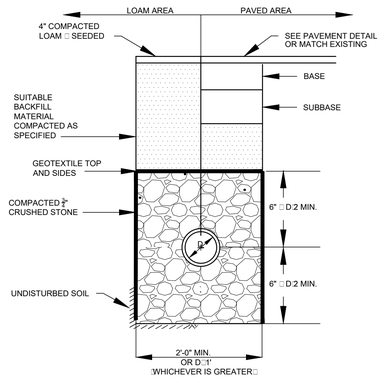

NOTES:
1. CRUSHED STONE SHALL BE CLEAN AND WASHED.

PERFORATED PIPE TRENCH

NOT TO SCALE

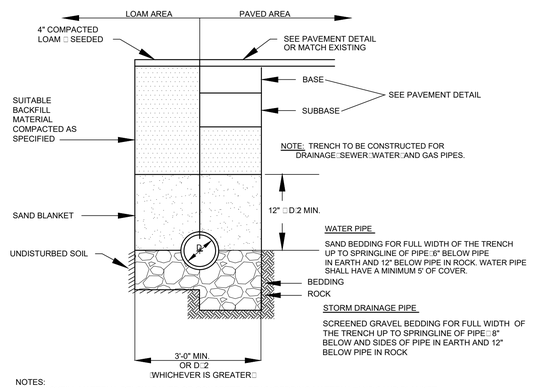

NOTES:
1. BACKFILL MATERIAL BELOW PAVED OR CONCRETE AREAS (BEDDING MATERIAL (AND SAND BLANKET SHALL BE COMPACTED TO NOT LESS THAN 95% OF AASHTO T 99 (METHOD C. SUITABLE BACKFILL MATERIAL BELOW LOAM AREAS SHALL BE COMPACTED TO NOT LESS THAN 90% OF AASHTO T 99 (METHOD C.
2. CONTRACTOR SHALL SUPPLY EXCAVATION (BEDDING AND BACKFILL FOR GAS LINE AND FIBER OPTIC LINE CONSTRUCTION. BEDDING AND BACKFILL MATERIAL SHALL CONFORM TO SERVICE PROVIDER STANDARDS.

UTILITY TRENCH

NOT TO SCALE

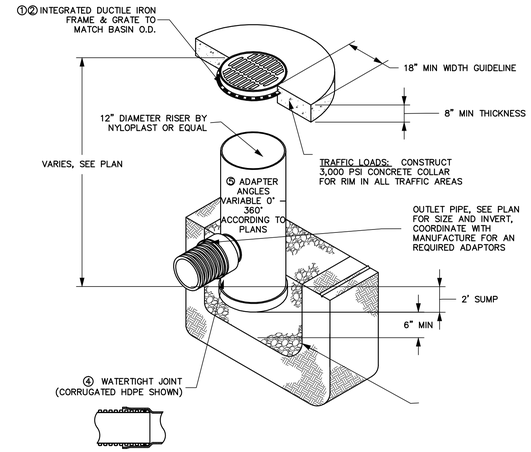

NOTES:
1. GRATES/SOLID COVER SHALL BE DUCTILE IRON PER ASTM A536 GRADE 70-50-05
2. FRAMES SHALL BE DUCTILE IRON PER ASTM A536 GRADE 70-50-05
3. DRAIN BASIN TO BE CUSTOM MANUFACTURED ACCORDING TO PLAN DETAILS.
4. DRAINAGE CONNECTION STUB JOINT TIGHTNESS SHALL CONFORM TO ASTM D3212 FOR CORRUGATED HDPE (ADS & HANCOR DUAL WALL) & SDR 35 PVC
5. ADAPTERS CAN BE MOUNTED ON ANY ANGLE 0° TO 360°. TO DETERMINE MINIMUM ANGLE BETWEEN ADAPTERS SEE DRAWING NO. 7001-110-013.
6. THE BACKFILL MATERIAL SHALL BE CRUSHED STONE OR OTHER GRANULAR MATERIAL MEETING THE REQUIREMENTS OF CLASS II MATERIAL AS DEFINED IN ASTM D2321. BEDDING & BACKFILL FOR SURFACE DRAINAGE INLETS SHALL BE PLACED & COMPACTED UNIFORMLY IN ACCORDANCE WITH ASTM D2321.

AREA DRAIN

NOT TO SCALE

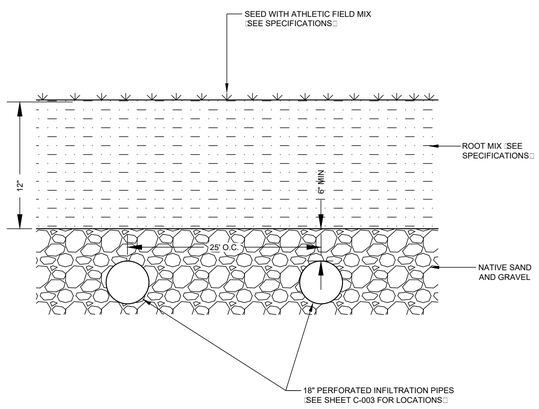

TYPICAL PLAYING FIELD SECTION

NOT TO SCALE

NOTES:

1. THE FILTRATION SOIL MIX SHALL CONSIST OF 20% TO 30% BY VOLUME TOPSOIL (30% TO 40% COMPOST AND 40% GRAVELY COARSE SAND MEETING THE FOLLOWING:

SEIVE	% PASSING BY WEIGHT
2-INCH	100
3/4-INCH	70-100
1/4-INCH	50-80
U.S.No. 40	15-40
U.S.N.o. 2000-3	

2. NO HEAVY E(UIPMENT MACHINERY SHALL COMPACT THE SOILS OF THE SOIL FILTER AREA BY DRIVING OVER. ROPE OFF OR PLACE CONSTRUCTION PLASTIC FENCING AROUND THE DESIGNATED BIO RETENTION AREA.

3. EXCAVATION SHOULD BE PERFORMED WITH MACHINERY SITUATED ON THE SIDE AND OUT OF THE EXCAVATION AREA. MACHINERY SHOULD NOT BE ALLOWED TO COMPACT THE SUBSURFACE SOILS OF THE EXCAVATION. IF MACHINERY MUST OPERATE IN THE BIORETENTION AREA USE SMALLER SI(ED EXCAVATION E(UIPMENT.

4. MIX SOIL WITH UNDERLYING SAND WITH ROTO-TILLER. ON-SITE SOIL MIXING OR PLACEMENT SHOULD NOT BE PERFORMED IF THE SOIL IS SATURATED.

5. BIORETENTION FACILITIES SHOULD NOT BE USED AS SEDIMENT CONTROL BASINS. ALL DRAINAGE SHOULD BE DIRECTED AWAY FROM AREAS DESIGNATED FOR BIORETENTION WITH TEMPORARY SEDIMENT CONTROL BASINS (DIVERSION SWALES (OR STAKED HAY BALES UNTIL UPSTREAM AREAS ARE STABILI(ED AND THE BIORENTION AREAS ARE COMPLETE.

NOTE: PLANTINGS SHOWN FOR PLANNING PURPOSES (SEE LANDSCAPE PLANS FOR ALL PLANTING RE(UIREMENTS

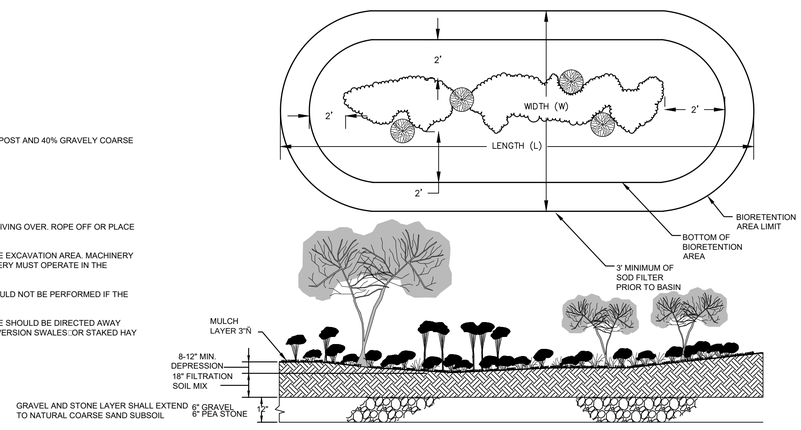

TYPICAL BIORETENTION AREA DETAIL

NOT TO SCALE

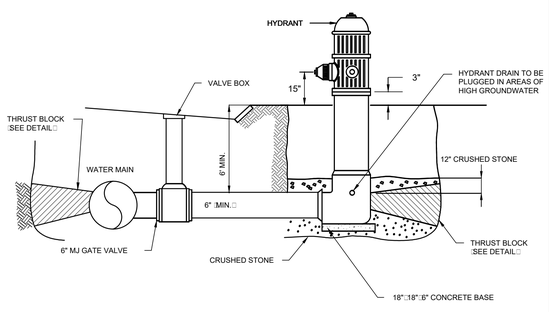

NOTES:

HYDRANT INSTALLATION AND OPERATION (MANUFACTURE AND MODEL (AND STANDARD DIMENSIONAL RE(UIREMENTS SHALL BE IN ACCORDANCE WITH THE TOWN OF WAYLAND RULES AND PROCEDURES.

FIRE HYDRANT

NOT TO SCALE

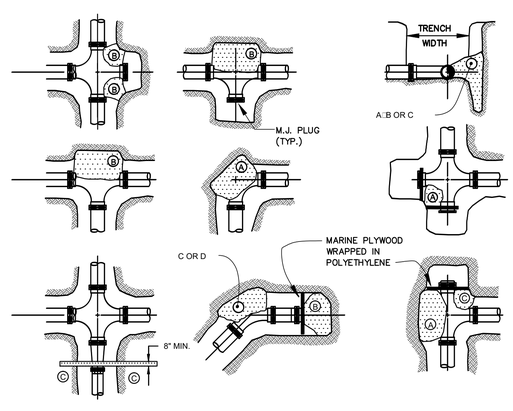

TEST PRESSURE (200psi	S(UARE FEET OF CONCRETE THRUST BLOCKING BEARING ON UNDISTURBED MATERIAL					
	REACTION TYPE	PIPE SI(E				
		4"	6"	8"	10"	12"
	A 90Â	0.89	2.19	3.82	11.14	17.24
	B 180Â	0.65	1.55	2.78	8.38	12.00
	C 45Â	0.48	1.19	2.12	6.02	9.32
	D 22-1/2Â	0.25	0.60	1.06	3.08	4.74
	E 11-1/4Â	0.13	0.30	0.54	1.54	2.38

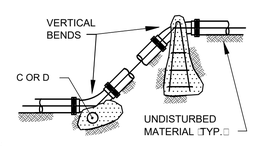

NOTES:

1. POUR THRUST BLOCKS AGAINST UNDISTURBED MATERIAL (WHERE TRENCH WALL HAS BEEN DISTURBED (EXCAVATE LOOSE MATERIAL AND EXTEND THRUST BLOCK TO UNDISTURBED MATERIAL. NO JOINTS SHALL BE COVERED WITH CONCRETE.
2. ON BENDS AND TEES (EXTEND THRUST BLOCKS FULL LENGTH OF FITTING.
3. PLACE BOARD IN FRONT OF ALL PLUGS BEFORE POURING THRUST BLOCKS.
4. WHERE M.J. PIPE IS USED (M.J. PLUG WITH RETAINER GLANDS MUST BE USED (GRIP RING (MEGA-LUG OR STAR GRIP

THRUST BLOCKS

NOT TO SCALE

Carroll School

25 Baker Bridge Road
Lincoln MA 01773

39/45 Waltham Road
Wayland MA 01778

Oak Consulting Group
CIVIL ENGINEER
978.312.3120

Brown|Sardina, Inc.
LANDSCAPE ARCHITECT
617.482.4703

Allied Consulting Services, Inc
MEPFP ENGINEER
978.443.7888

SCHLESINGER AND BUCHBINDER
PROJECT ATTORNEY
617.965.3500

DSK Dewing Schmid Kearns
ARCHITECTS + PLANNERS

Suite 200B
30 Monument Square
Concord, MA 01742
978.371.7500

280 Elm Street
South Dartmouth
MA 02748
508.999.0440

www.dskap.com

SITE PLAN SUBMISSION

NO.	DATE	REVISION	BY

NO.	DATE	ISSUED TO	BY

TITLE

SITE DETAILS PLAN

DATE	6/27/16
SCALE	AS SHOWN
JOB NO.	16011
DRAWN BY	SPM

C-006

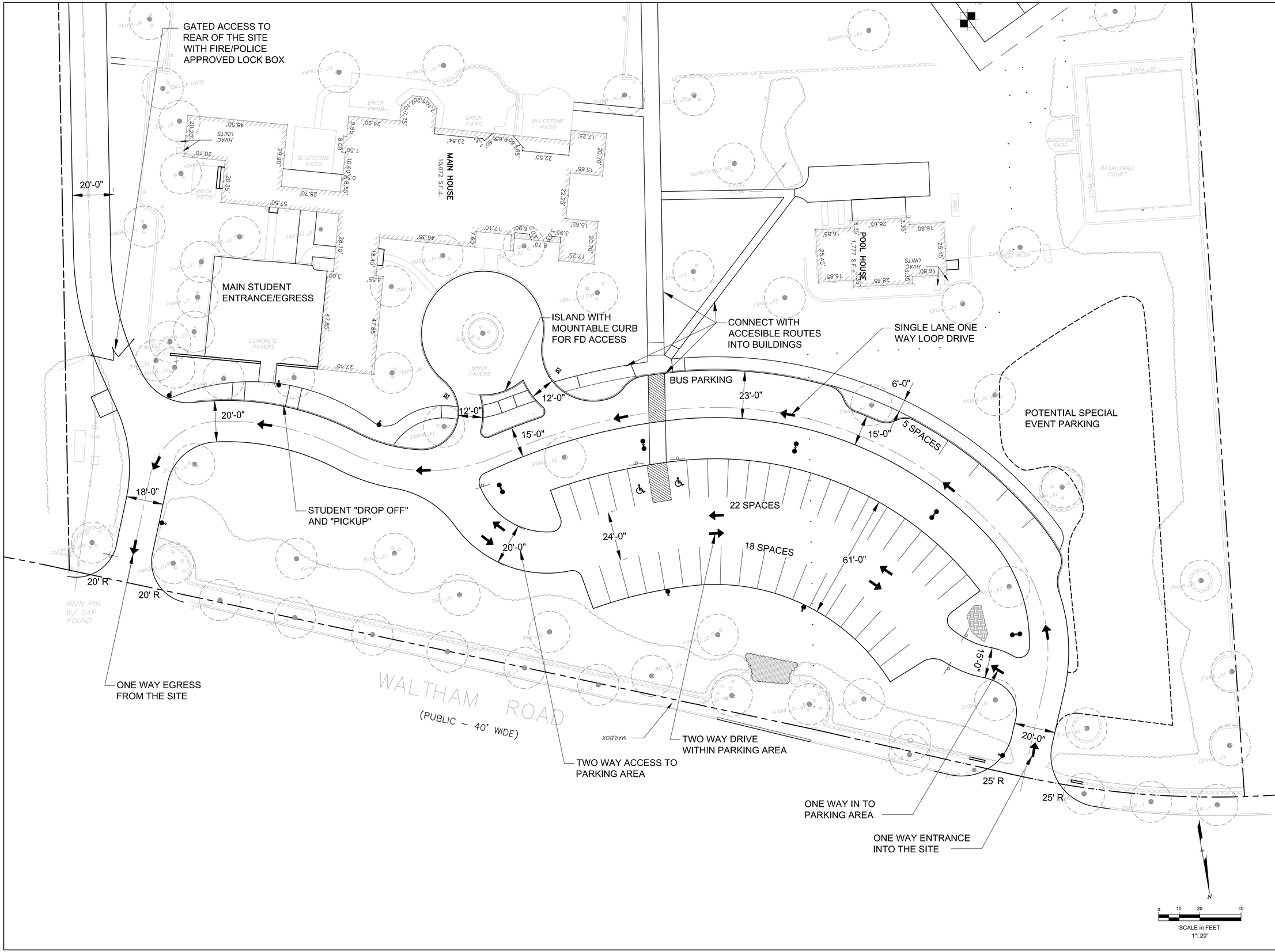

Carroll School

25 Baker Bridge Road
Lincoln MA 01773

39/45 Waltham Road
Wayland MA 01778

Oak Consulting Group
CIVIL ENGINEER
978.312.3120

Brown|Sardina, Inc.
LANDSCAPE ARCHITECT
617.482.4703

Allied Consulting Services, Inc
MEPFP ENGINEER
978.443.7888

SCHLESINGER AND BUCHBINDER
PROJECT ATTORNEY
617.965.3500

DSK Dewing Schmid Kearns
ARCHITECTS + PLANNERS

Suite 200B
30 Monument Square
Concord, MA 01742
978.371.7500

280 Elm Street
South Dartmouth
MA 02748
508.999.0440

www.dskap.com

SITE PLAN SUBMISSION

NO.	DATE	REVISION	BY

NO.	DATE	ISSUED TO	BY

TITLE

PROPOSED
SITE CIRCULATION
PLAN

DATE	6/27/16
SCALE	AS SHOWN
JOB NO.	16011
DRAWN BY	SPM

C-007

NOTES:

1. TEMPORARY BALL NETTING MAY BE LOCATED AT SPORTS FIELDS PER OWNER DIRECTION.
2. EXISTING TREE UP-LIGHTING SHALL BE REMOVED.

LEGEND

	EXISTING LIGHTS TO BE REMOVED
	EXISTING LIGHTS TO REMAIN
	NEW SITE LIGHTS
AD	AREA DRAIN - SEE CIVIL DWGS
	DIRECTION OF VEHICLE TRAVEL

NEW GATE
NEW SEGMENTAL RETAINING WALL WITH 6' CHAIN LINK FENCE
NEW SPORTS FIELD #2
FIELD #2
EXISTING BASKETBALL COURT TO REMAIN
EXISTING STONE WALL TO REMAIN
SPECIAL EVENT PARKING AREA
NEW DARK SKY COMPLIANT LIGHT FIXTURES (TYP.)
EXISTING POOL HOUSE AND EQUIPMENT TO BE REMOVED
EXISTING STONE WALL TO BE REMOVED
EXISTING STONE WALL TO BE REMAIN
NEW CONC. WALK
NEW VERT. GRANITE CURB
5 SPACES
POOL HOUSE
SIGN ON WALL
EXISTING POOL AND PAVEMENT TO BE REMOVED
EXISTING PAVEMENT TO REMAIN
EXISTING LIGHT POLES TO REMAIN
EXISTING STONE WALL TO REMAIN
VISITOR BUS PARKING
PROPERTY LINE
NO DISTURB LINE
30' BUILDING SETBACK
100' WETLAND BUFFER
EXIST. BARN TO BE RELOCATED AND MODIFIED CONC. PADS TO BE REMOVED
NEW CONC. WALK
RIDGE LANE
40 SPACES
EXISTING BITUMINOUS CONC. DRIVEWAY AND COBBLE CURBS TO BE REMOVED (TYP.)
NEW CURBING TO MATCH EXISTING CURBING ON WALTHAM ROAD
NEW BITUMINOUS CONC. PARKING AREA
PROPOSED ACCESSIBLE ENTRANCE
EXISTING PAVED PATIOS TO REMAIN (TYP.)
EXISTING PAVEMENT TO REMAIN (TYP.)
HANDICAP CURB CUT RAMP (TYP.)
RELOCATED LIGHT FIXTURE (TYP.)
FIELD #1
RELOCATED BARN
NEW SPORTS FIELD #1
NEW 4' CHAIN LINK FENCE
MAIN HOUSE
EXISTING STONE WALL TO REMAIN
PROPOSED ACCESSIBLE ENTRANCE
EXISTING PAVEMENT TO REMAIN
EXISTING STONE WALL TO REMAIN
EXISTING SEPTIC SYSTEM
NEW GATE
NEW BITUMINOUS CONC. DRIVEWAY - EXISTING BITUMINOUS CONC. DRIVEWAY TO BE REMOVED
NEW GATE
EXISTING LOG POST GATE TO BE REMOVED
EXISTING GAS METER TRANSFORMER GENERATOR AND UTILITY BOXES TO REMAIN
EXISTING LIGHT FIXTURE TO REMAIN (TYP.)
EXISTING FIRE HYDRANT
NEW GATES
MODIFIED EXISTING TRASH RECYCLING ENCLOSURE

0 5 10 20 40 100

NORTH

Carroll School

25 Baker Bridge Road
Lincoln MA 01773

39/45 Waltham Road
Wayland MA 01778

Oak Consulting Group
CIVIL ENGINEER
978.312.3120

Brown|Sardina, Inc.
LANDSCAPE ARCHITECT
617.482.4703

Allied Consulting Services, Inc
MEPFP ENGINEER
978.443.7888

DSK Dewing Schmid Kearns
ARCHITECTS + PLANNERS

Suite 200B
30 Monument Square
Concord, MA 01742
978.371.7500

280 Elm Street
South Dartmouth
MA 02748
508.999.0440

www.dskap.com

SITE PLAN SUBMISSION

NO.	DATE	REVISION	BY

NO.	DATE	ISSUED TO	BY

TITLE

MATERIALS PLAN

DATE	6/27/16
SCALE	1"=40'-0"
JOB NO.	
DRAWN BY	LPO

L101

Jun 27, 2016 - 12:42pm - F:\Active Files\dsw - dewing schmid kearns\1601 - carroll school\dwgs\L101 - materials.dwg

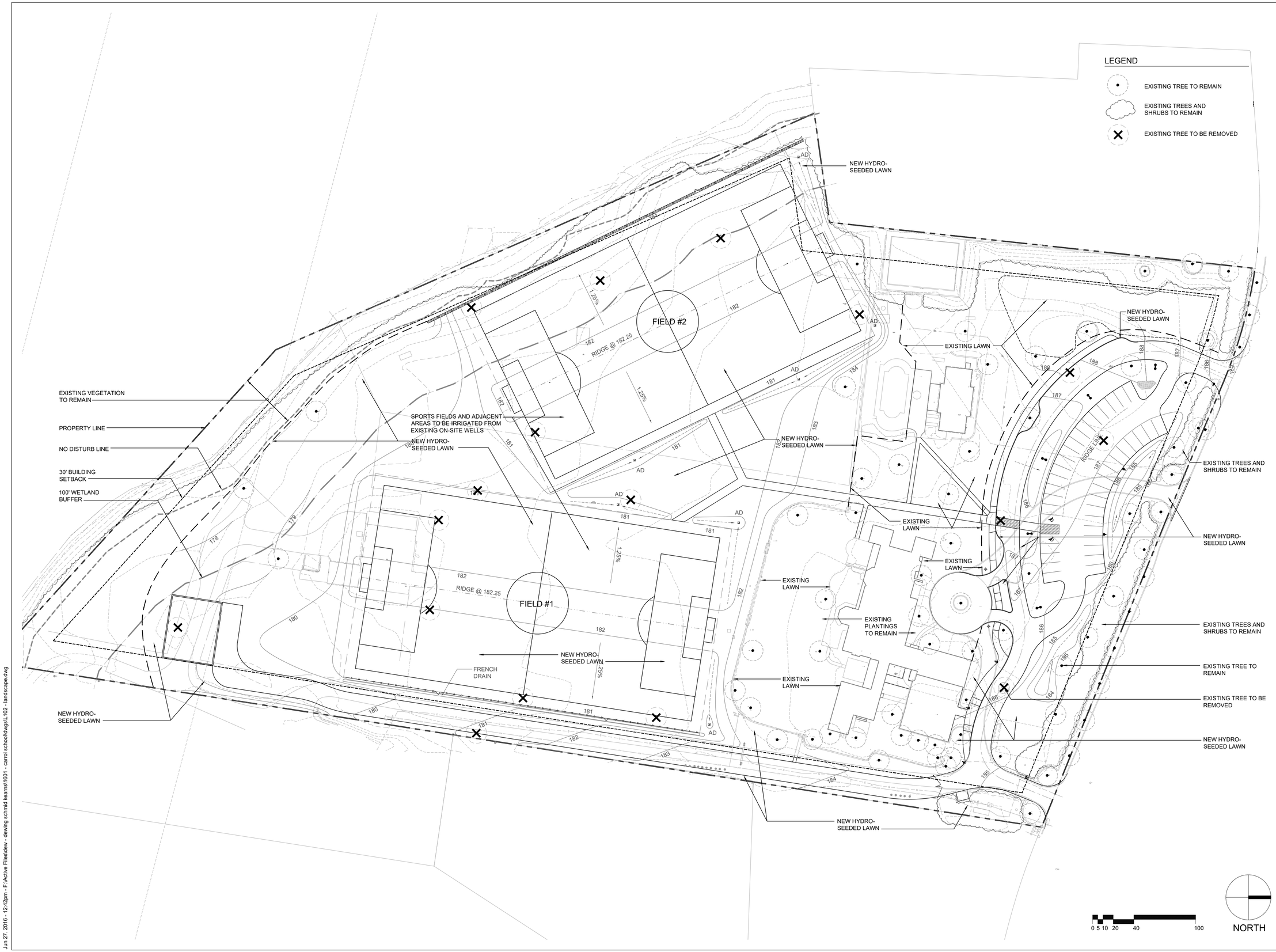

Carroll School

25 Baker Bridge Road
Lincoln MA 01773

39/45 Waltham Road
Wayland MA 01778

Oak Consulting Group
CIVIL ENGINEER
978.312.3120

Brown|Sardina, Inc.
LANDSCAPE ARCHITECT
617.482.4703

Allied Consulting Services, Inc
MEPFP ENGINEER
978.443.7888

DSK Dewing Schmid Kearns
ARCHITECTS + PLANNERS

Suite 200B
30 Monument Square
Concord, MA 01742
978.371.7500

280 Elm Street
South Dartmouth
MA 02748
508.999.0440

www.dskap.com

SITE PLAN SUBMISSION

NO.	DATE	REVISION	BY

NO.	DATE	ISSUED TO	BY

TITLE

LANDSCAPE PLAN

DATE	6/27/16
SCALE	1"=40'-0"
JOB NO.	
DRAWN BY	LPO

L102

Jun 27, 2016 - 12:42pm - F:\Active Files\dsk - dewing schmid kearns\1601 - carroll school\dwgs\L102 - landscape.dwg

EXISTING CONDITIONS NOTES:

1. EXISTING CONDITIONS BASED ON ON THE GROUND TOPOGRAPHIC SURVEY BY STAMSKI AND MCNARY IN THE SPRING OF 2016.
2. THE VERTICAL DATUM SHOWN IS NAVD88
3. PORTIONS OF THE PROJECT AREA ARE WITHIN A FEMA FLOOD □ONE X TAKEN FROM FEMA FIRM MAP 25017C0389F□EFFECTIVE DATE JULY 7□ 2015.

LEGEND

- SUBCATCHMENT BOUNDARY
- LONGEST HYDRAULIC FLOW PATH
- 1a SUBCATCHMENT NUMBER

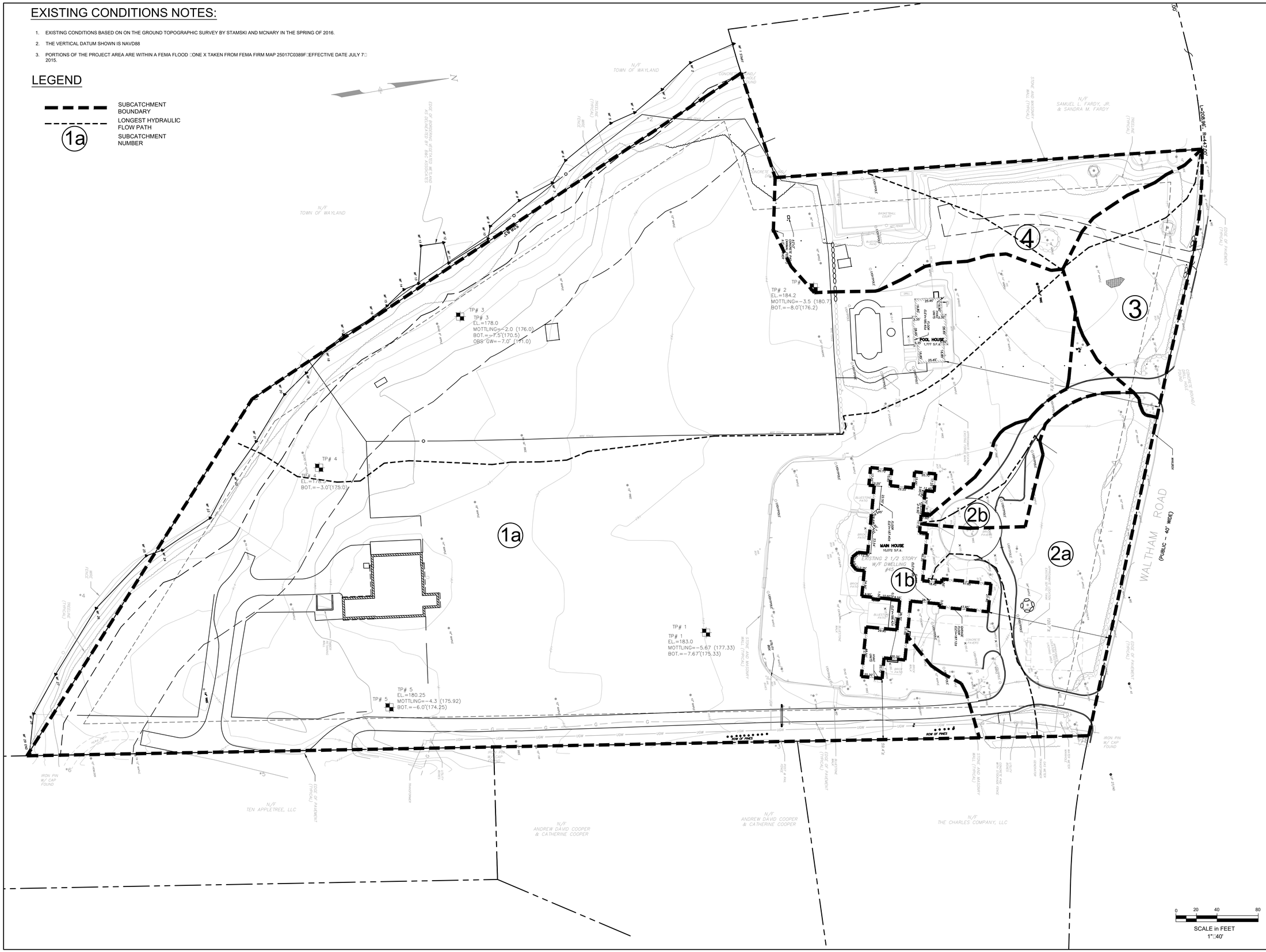

Carroll School

25 Baker Bridge Road
Lincoln MA 01773

39/45 Waltham Road
Wayland MA 01778

Oak Consulting Group
CIVIL ENGINEER
978.312.3120

Brown|Sardina, Inc.
LANDSCAPE ARCHITECT
617.482.4703

Allied Consulting Services, Inc
MEPFP ENGINEER
978.443.7888

SCHLESINGER AND BUCHBINDER
PROJECT ATTORNEY
617.965.3500

DSK Dewing Schmid Kearns
ARCHITECTS + PLANNERS

Suite 200B
30 Monument Square
Concord, MA 01742
978.371.7500

280 Elm Street
South Dartmouth
MA 02748
508.999.0440

www.dskap.com

SITE PLAN SUBMISSION

NO.	DATE	REVISION	BY

NO.	DATE	ISSUED TO	BY

TITLE

PRE-DEVELOPMENT
SUBCATCHMENT PLAN

DATE	6/27/16
SCALE	AS SHOWN
JOB NO.	16011
DRAWN BY	SPM

DR-001

NOTES:

1. SEE PROJECT PLANS FOR ALL DRAINAGE AND EROSION CONTROL DESIGN INFORMATION.

LEGEND

SUBCATCHMENT BOUNDARY

LONGEST HYDRAULIC FLOW PATH

1a SUBCATCHMENT NUMBER

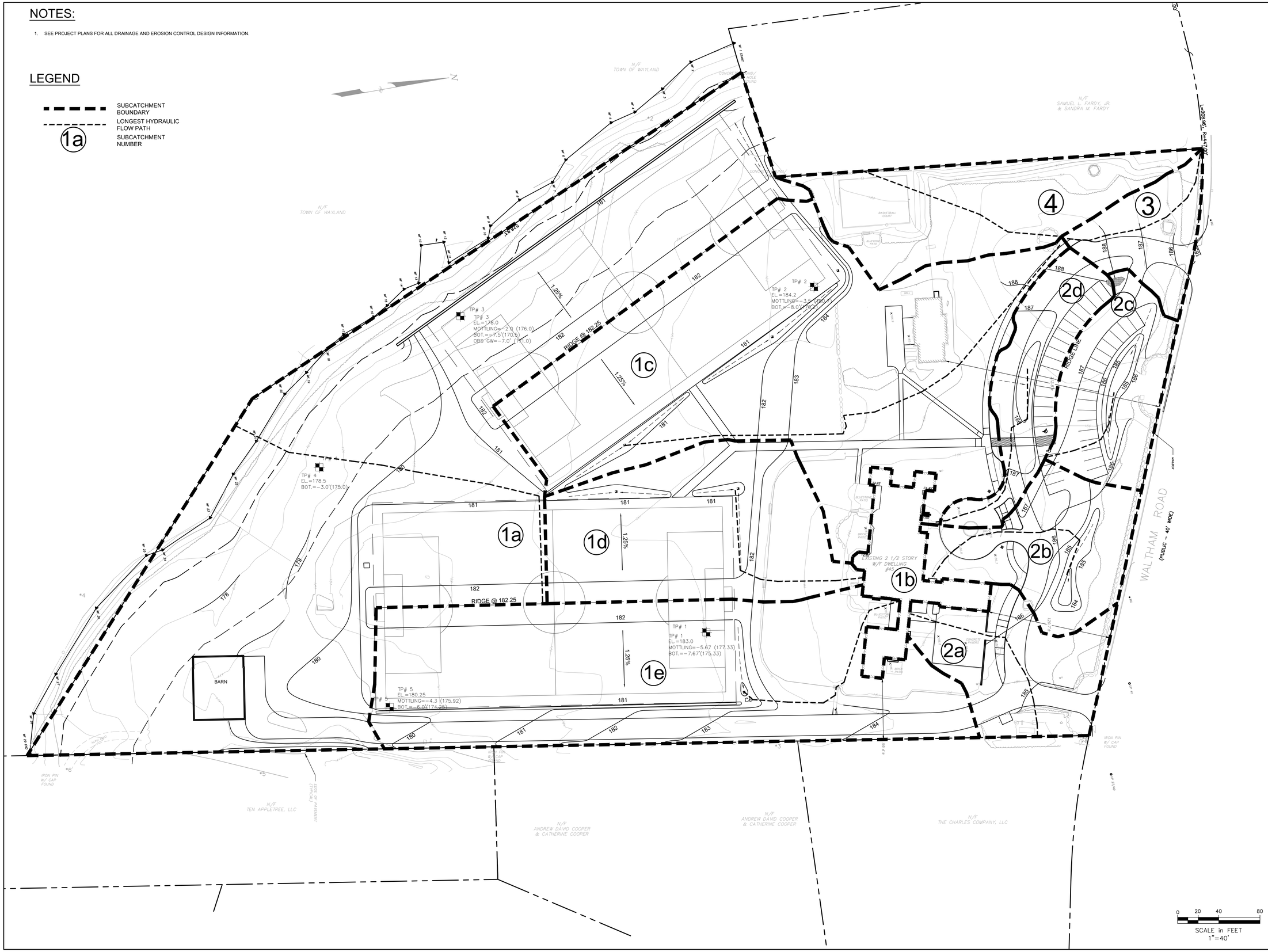

SEAN P. MALONE CIVIL No. 48204 6-27-16

Carroll School

25 Baker Bridge Road
Lincoln MA 01773

39/45 Waltham Road
Wayland MA 01778

Oak Consulting Group
CIVIL ENGINEER
978.312.3120

Brown|Sardina, Inc.
LANDSCAPE ARCHITECT
617.482.4703

Allied Consulting Services, Inc
MEPFP ENGINEER
978.443.7888

SCHLESINGER AND BUCHBINDER
PROJECT ATTORNEY
617.965.3500

DSK Dewing Schmid Kearns
ARCHITECTS + PLANNERS

Suite 200B
30 Monument Square
Concord, MA 01742
978.371.7500

280 Elm Street
South Dartmouth
MA 02748
508.999.0440

www.dskap.com

SITE PLAN SUBMISSION

NO.	DATE	REVISION	BY

NO.	DATE	ISSUED TO	BY

TITLE

PLANS:
POST-DEVELOPMENT
SUBCATCHMENT PLAN

DATE	6/27/16
SCALE	AS SHOWN
JOB NO.	16011
DRAWN BY	SPM

DR-002