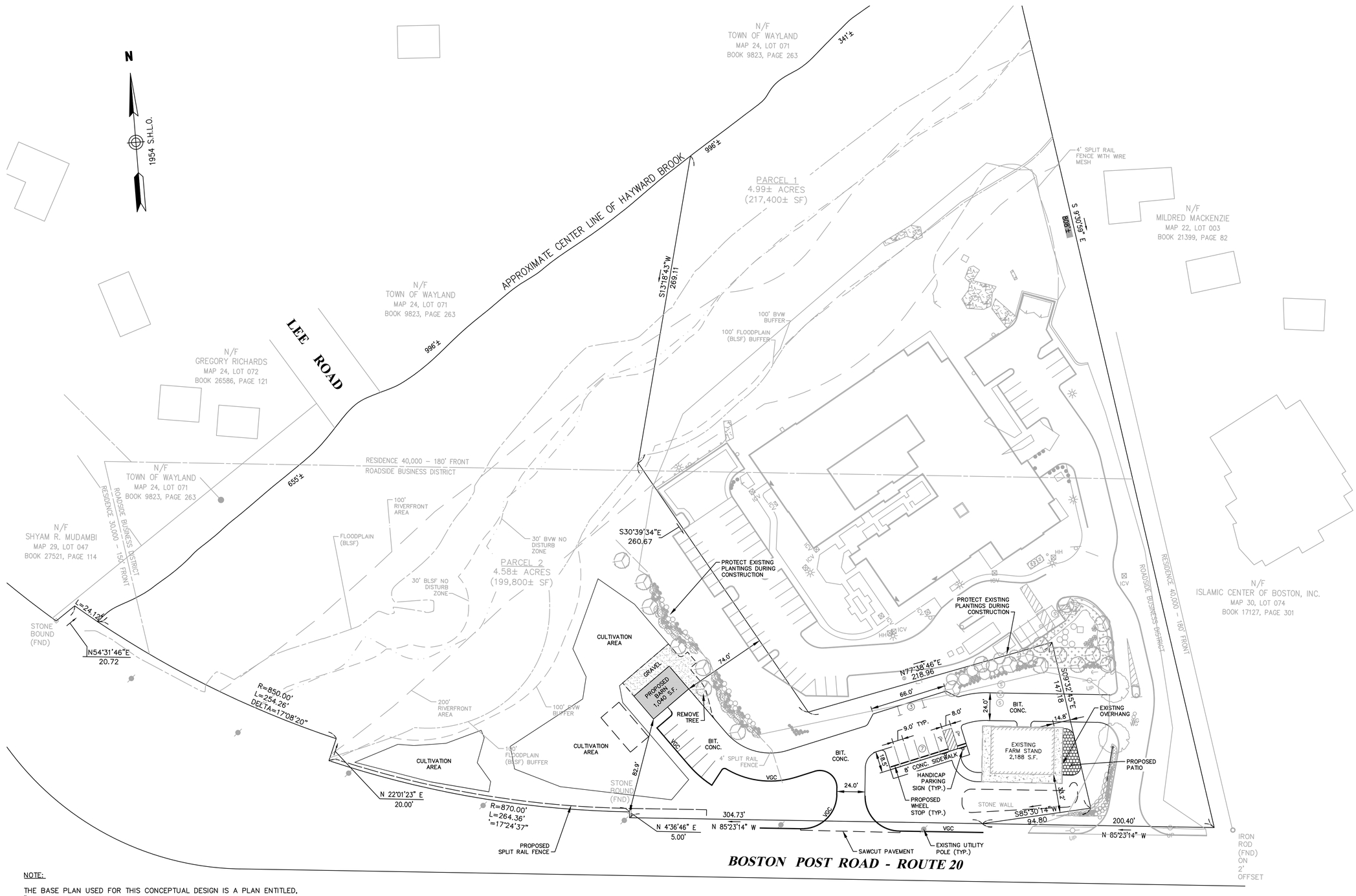

NOTE:

THE BASE PLAN USED FOR THIS CONCEPTUAL DESIGN IS A PLAN ENTITLED, "NORTHBRIDGE WAYLAND, 134 BOSTON POST ROAD, WAYLAND, MASSAHCUSETTS, GRADING, DRAINAGE, AND EROSION CONTROL PLAN", DRAWING NO. C-3, PREPARED BY STEPHENSON DESIGN GROUP, LLC, REVISED JULY 6, 2012.

ISSUED FOR PERMITTING
NOT FOR CONSTRUCTION

COMMONWEALTH OF MASSACHUSETTS
BRIAN G. YERGATIAN
CIVIL
No. 45208
REGISTERED PROFESSIONAL ENGINEER

11/30/21

FOR THE BSC GROUP, INC. PROFESSIONAL ENGINEER — DATE

ROADSIDE FARM STAND

136 BOSTON POST ROAD
IN
WAYLAND
MASSACHUSETTS
(MIDDLESEX COUNTY)

LAYOUT & MATERIALS PLAN

NOVEMBER 12, 2021

REVISIONS:

NO.	DATE	DESC.
1	11/22/21	STORMWATER DESIGN
2	11/30/21	GARAGE DOOR ACCESS

PREPARED FOR:
NORTHBRIDGE COMPANIES
71 THIRD AVENUE
BURLINGTON, MA 01803

BSC GROUP
33 Waldo Street
Worcester, Massachusetts
01608
508 792 4500

© 2021 BSC Group, Inc.

SCALE: 1" = 40'
0 20 40 80 FEET

FILE: WOR\6113600\C\D\6113600-CP3.dwg
DWG.:
JOB. NO: 6-1136.00
SHEET C-100

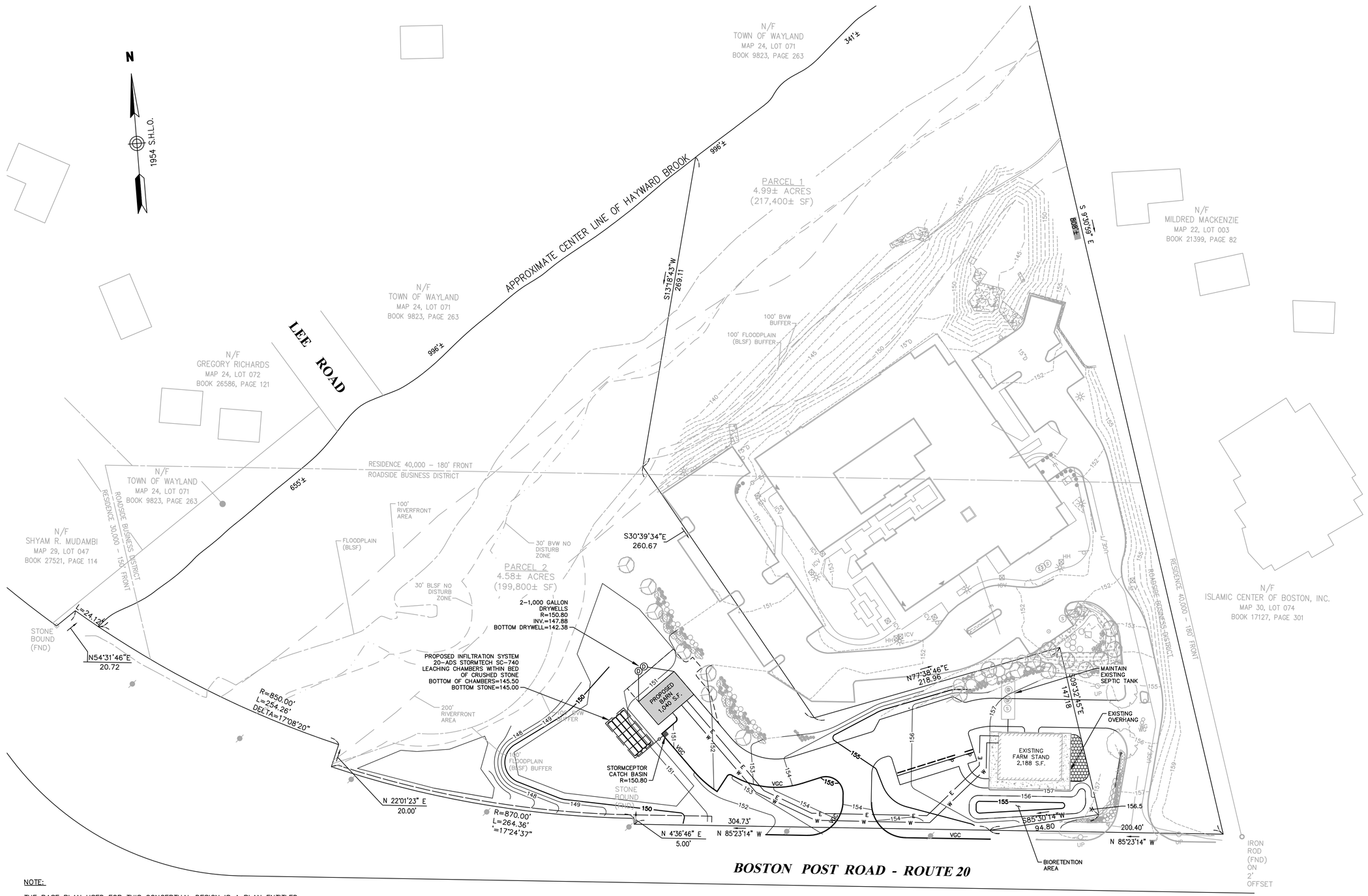

NOTE:

THE BASE PLAN USED FOR THIS CONCEPTUAL DESIGN IS A PLAN ENTITLED, "NORTHBRIDGE WAYLAND, 134 BOSTON POST ROAD, WAYLAND, MASSAHCUSETTS, GRADING, DRAINAGE, AND EROSION CONTROL PLAN", DRAWING NO. C–3, PREPARED BY STEPHENSON DESIGN GROUP, LLC, REVISED JULY 6, 2012.

ISSUED FOR PERMITTING
NOT FOR CONSTRUCTION

COMMONWEALTH OF MASSACHUSETTS
BRIAN G. YERGATIAN
CIVIL
No. 45208
REGISTERED PROFESSIONAL ENGINEER

11/30/21

FOR THE BSC GROUP, INC. PROFESSIONAL ENGINEER — DATE

ROADSIDE FARM STAND

136 BOSTON POST ROAD

IN

WAYLAND
MASSACHUSETTS
(MIDDLESEX COUNTY)

GRADING & DRAINAGE PLAN

NOVEMBER 12, 2021

REVISIONS:

NO.	DATE	DESC.
1	11/22/21	STORMWATER DESIGN
2	11/30/21	GARAGE DOOR ACCESS

PREPARED FOR:
NORTHBRIDGE COMPANIES
71 THIRD AVENUE
BURLINGTON, MA 01803

BSC GROUP
33 Waldo Street
Worcester, Massachusetts
01608
508 792 4500

© 2021 BSC Group, Inc.

SCALE: 1" = 40'
0 20 40 80 FEET

FILE: WOR\6113600\C\D\6113600–CP3.dwg
DWG.:
JOB. NO: 6–1136.00
SHEET C-101

EROSION AND SEDIMENT CONTROL NOTES:

1. PRIOR TO ANY LAND DISTURBANCE ACTIVITIES COMMENCING ON THE SITE, THE DEVELOPER SHALL PHYSICALLY MARK LIMITS OF NO LAND DISTURBANCE ON THE SITE WITH TAPE, SIGNS, OR ORANGE CONSTRUCTION FENCE, SO THAT WORKERS CAN SEE THE AREAS TO BE PROTECTED. THE PHYSICAL MARKERS SHALL REMAIN IN PLACE UNTIL A CERTIFICATE OF COMPLETION HAS BEEN ISSUED.
2. APPROPRIATE EROSION AND SEDIMENT CONTROL MEASURES SHALL BE INSTALLED PRIOR TO SOIL DISTURBANCE. MEASURES SHALL BE TAKEN TO CONTROL EROSION WITHIN THE PROJECT AREA. SEDIMENT IN RUNOFF WATER SHALL BE TRAPPED AND RETAINED WITHIN THE PROJECT AREA. WETLAND AREAS AND SURFACE WATERS SHALL BE PROTECTED FROM SEDIMENT.
3. MINIMIZE TOTAL AREA OF DISTURBANCE AND PROTECT NATURAL FEATURES AND SOIL.
4. THE CONTRACTOR SHALL SEQUENCE ALL ACTIVITIES TO MINIMIZE SIMULTANEOUS AREAS OF DISTURBANCE. MASS CLEARING AND GRADING OF THE ENTIRE SITE SHALL BE AVOIDED.
5. MINIMIZE SOIL EROSION AND CONTROL SEDIMENTATION DURING CONSTRUCTION.
6. DIVERT UNCONTAMINATED WATER AROUND DISTURBED AREAS.
7. INSTALL AND MAINTAIN ALL EROSION AND SEDIMENT CONTROL MEASURES IN ACCORDANCE WITH THE MANUFACTURER'S SPECIFICATIONS AND GOOD ENGINEERING PRACTICES.
8. PROTECT AND MANAGE ON AND OFF-SITE MATERIAL STORAGE AREAS (OVERBURDEN AND STOCKPILES OF DIRT, BORROW AREAS, OR OTHER AREAS USED SOLELY BY THE PERMITTED PROJECT ARE CONSIDERED A PART OF THE PROJECT).
9. COMPLY WITH APPLICABLE FEDERAL, STATE AND LOCAL LAWS AND REGULATIONS INCLUDING WASTE DISPOSAL, SANITARY OR SEWER REGULATIONS, AND AIR QUALITY REQUIREMENTS, INCLUDING DUST CONTROL.
10. SEDIMENT SHALL BE REMOVED ONCE THE VOLUME REACHES 1/4 TO 1/2 THE HEIGHT OF THE EROSION CONTROL DEVICE. SEDIMENT SHALL BE REMOVED FROM SILT FENCE PRIOR TO REACHING THE LOAD-BEARING CAPACITY OF THE SILT FENCE WHICH MAY BE LOWER THAN 1/4 TO 1/2 THE HEIGHT.
11. SEDIMENT FROM SEDIMENT TRAPS OR SEDIMENTATION PONDS SHALL BE REMOVED WHEN DESIGN CAPACITY HAS BEEN REDUCED BY 50 PERCENT.
12. BMPS TO BE USED FOR INFILTRATION AFTER CONSTRUCTION SHALL NOT BE USED AS BMPS DURING CONSTRUCTION UNLESS OTHERWISE APPROVED BY THE ENGINEER AND THE TOWN OF NOROFLK. MANY INFILTRATION TECHNOLOGIES ARE NOT DESIGNED TO HANDLE THE HIGH CONCENTRATIONS OF SEDIMENTS TYPICALLY FOUND IN CONSTRUCTION RUNOFF, AND THUS MUST BE PROTECTED FROM CONSTRUCTION RELATED SEDIMENT LOADINGS.
13. SOIL STOCKPILES MUST BE STABILIZED OR COVERED AT THE END OF EACH WORKDAY. STOCKPILE SIDE SLOPES SHALL NOT BE GREATER THAN 2:1. ALL STOCKPILES SHALL BE SURROUNDED BY SEDIMENT CONTROLS.
14. FOR ACTIVE CONSTRUCTION AREAS SUCH AS BORROW OR STOCKPILE AREAS, ROADWAY IMPROVEMENTS AND AREAS WITHIN 50 FEET OF A BUILDING UNDER CONSTRUCTION, A PERIMETER SEDIMENT CONTROL SYSTEM SHALL BE INSTALLED AND MAINTAINED TO CONTAIN SOIL.
15. PERMANENT SEEDING SHALL BE UNDERTAKEN IN THE SPRING FROM MARCH THROUGH MAY, AND IN LATE SUMMER AND EARLY FALL FROM AUGUST TO OCTOBER 15. DURING THE PEAK SUMMER MONTHS AND IN THE FALL AFTER OCTOBER 15, WHEN SEEDING IS FOUND TO BE IMPRACTICAL, APPROPRIATE TEMPORARY STABILIZATION SHALL BE APPLIED. PERMANENT SEEDING MAY BE UNDERTAKEN DURING THE SUMMER IF PLANS PROVIDE FOR ADEQUATE MULCHING AND WATERING.
16. ALL SLOPES STEEPER THAN 3:1 (H:V, 33.3%), AS WELL AS PERIMETER DIKES, SEDIMENT BASINS OR TRAPS, AND EMBANKMENTS MUST, UPON COMPLETION, BE IMMEDIATELY STABILIZED WITH SOD, SEED AND ANCHORED STRAW MULCH, OR OTHER APPROVED STABILIZATION MEASURES. AREAS OUTSIDE OF THE PERIMETER SEDIMENT CONTROL SYSTEM MUST NOT BE DISTURBED.
17. TEMPORARY SEDIMENT TRAPPING DEVICES MUST NOT BE REMOVED UNTIL PERMANENT STABILIZATION IS ESTABLISHED IN ALL CONTRIBUTORY DRAINAGE AREAS.
18. ALL TEMPORARY EROSION AND SEDIMENT CONTROL MEASURES SHALL BE REMOVED AFTER FINAL SITE STABILIZATION DISTURBED SOIL AREAS RESULTING FROM THE REMOVAL OF TEMPORARY MEASURES SHALL BE PERMANENTLY STABILIZED WITHIN 30 DAYS OF REMOVAL.
19. PROPERLY MANAGE ON-SITE CONSTRUCTION AND WASTE MATERIALS.
20. PREVENT OFF-SITE VEHICLE TRACKING OF SEDIMENTS.
21. DUST SHALL BE CONTROLLED AT THE SITE.
22. ALL PREVIOUSLY DISTURBED LAND SHALL BE STABILIZED BY APPROVED METHODS AFTER 14 DAYS IF LEFT UNDISTURBED, THIS INCLUDES STOCKPILES, CONSTRUCTION ENTRANCES, GRADED AREAS AND OTHER CONSTRUCTION ACTIVITY RELATED CLEARING.
23. IF WORK IS HALTED OVER WINTER MONTHS THE CONTRACTOR SHALL BE RESPONSIBLE FOR STABILIZING THE AREA THROUGH GROUND COVER PRACTICES.

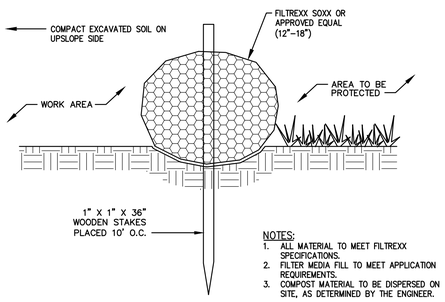

NOTES:
1. ALL MATERIAL TO MEET FILTREXX SPECIFICATIONS.
2. FILTER MEDIA FILL TO MEET APPLICATION REQUIREMENTS.
3. COMPOST MATERIAL TO BE DISPERSED ON SITE, AS DETERMINED BY THE ENGINEER.

COMPOST FILTER SOCK
SCALE: NONE

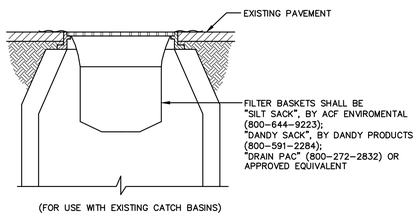

NOTE:
FILTER BASKETS TO BE PLACED IN ALL CATCH BASINS IN THE VICINITY OF NEW CONSTRUCTION. CATCH BASINS ARE TO BE PROTECTED AS SHOWN, WITH MINIMUM WEEKLY MAINTENANCE, OR AS REQUIRED AND REPLACED IF NECESSARY.

SEDIMENT FILTER INLET PROTECTION
SCALE: NONE

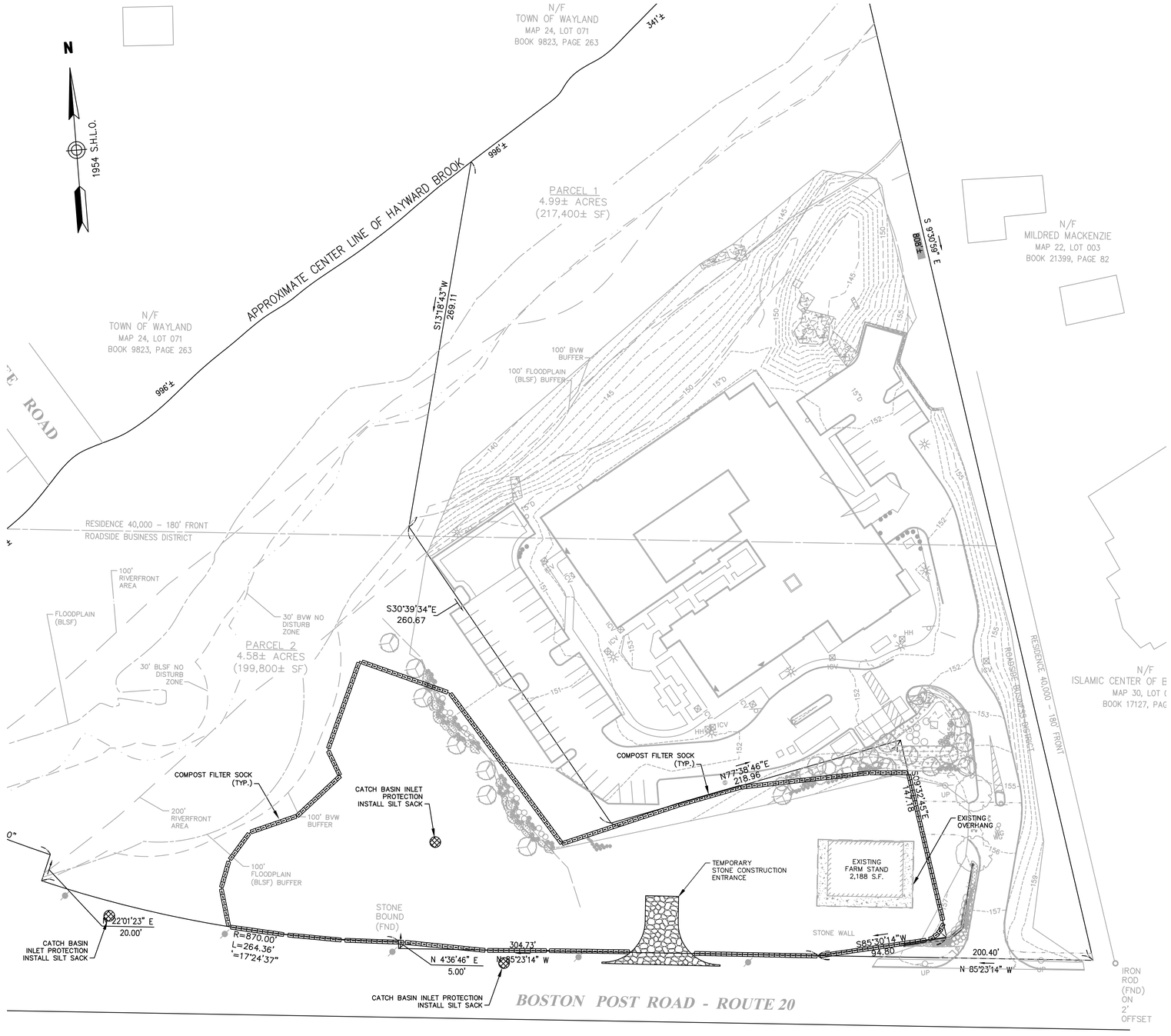

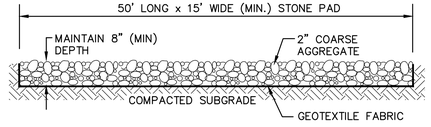

TEMPORARY CONSTRUCTION ENTRANCE
SCALE: NONE

NOTE:
THE BASE PLAN USED FOR THIS CONCEPTUAL DESIGN IS A PLAN ENTITLED, "NORTHBRIDGE WAYLAND, 134 BOSTON POST ROAD, WAYLAND, MASSAHCUSETTS, GRADING, DRAINAGE, AND EROSION CONTROL PLAN", DRAWING NO. C-3, PREPARED BY STEPHENSON DESIGN GROUP, LLC, REVISED JULY 6, 2012.

ISSUED FOR PERMITTING
NOT FOR CONSTRUCTION

COMMONWEALTH OF MASSACHUSETTS
BRIAN G. YERGATIAN
CIVIL
No. 46508
REGISTERED PROFESSIONAL ENGINEER

11/30/21
FOR THE BSC GROUP, INC. PROFESSIONAL ENGINEER — DATE

ROADSIDE FARM STAND

136 BOSTON POST ROAD
IN
WAYLAND
MASSACHUSETTS
(MIDDLESEX COUNTY)

EROSION & SEDIMENT CONTROL PLAN

NOVEMBER 12, 2021

REVISIONS:

NO.	DATE	DESC.
1	11/22/21	STORMWATER DESIGN
2	11/30/21	GARAGE DOOR ACCESS

PREPARED FOR:
NORTHBRIDGE COMPANIES
71 THIRD AVENUE
BURLINGTON, MA 01803

BSC GROUP
33 Waldo Street
Worcester, Massachusetts
01608
508 792 4500

© 2021 BSC Group, Inc.

SCALE: 1" = 40'
0 20 40 80 FEET

FILE: WOR\6113600\C\D\6113600-CP3.dwg
DWG.:
JOB. NO: 6-1136.00
SHEET C-102

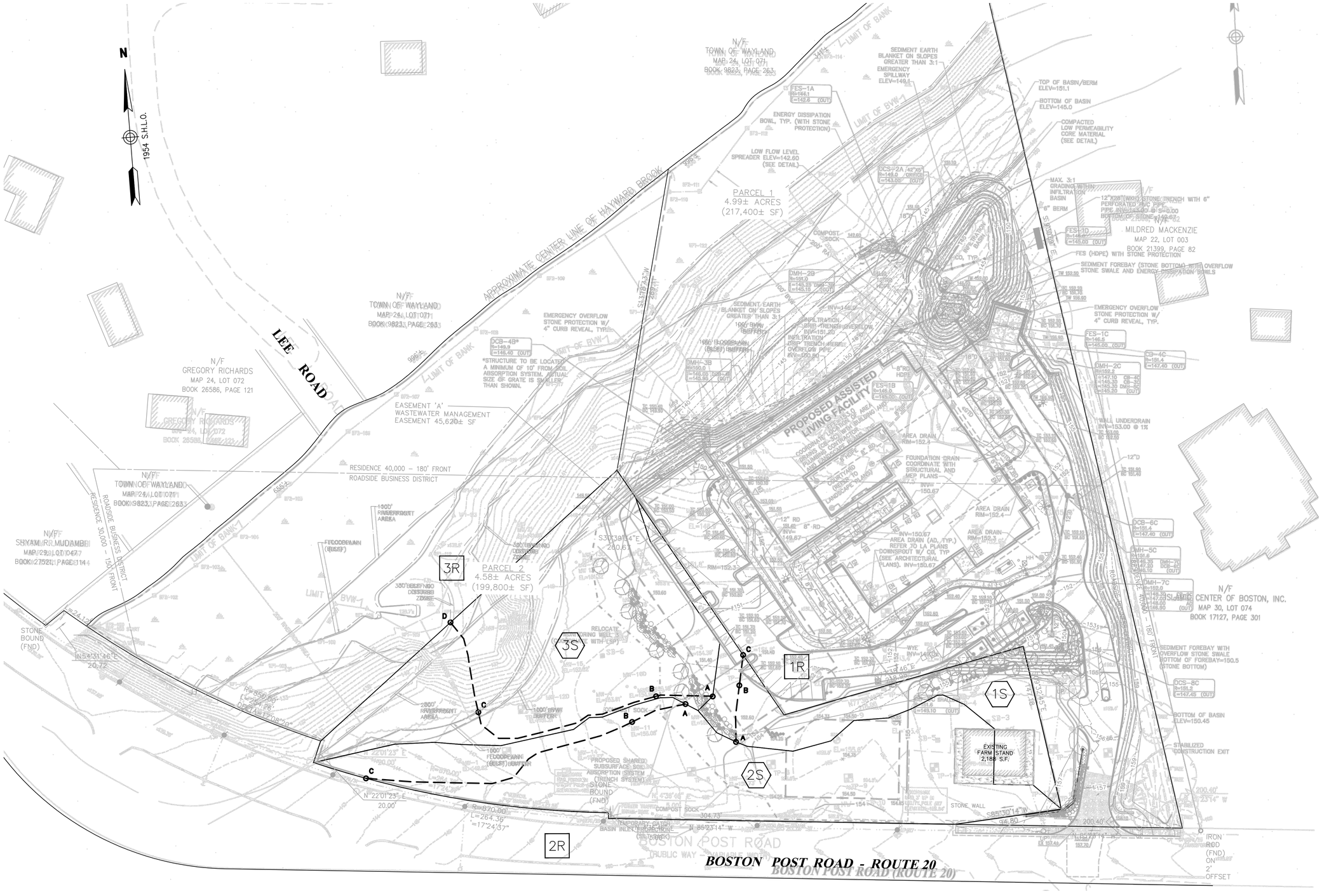

ISSUED FOR PERMITTING
NOT FOR CONSTRUCTION

COMMONWEALTH OF MASSACHUSETTS
BRIAN G. YERGATIAN
CIVIL
No. 46306
REGISTERED PROFESSIONAL ENGINEER

11/30/21

FOR THE BSC GROUP, INC. PROFESSIONAL ENGINEER — DATE

ROADSIDE FARM STAND

136 BOSTON POST ROAD

IN

WAYLAND
MASSACHUSETTS
(MIDDLESEX COUNTY)

PRE-DEVELOPMENT
WATERSHED PLAN

NOVEMBER 12, 2021

REVISIONS:

NO.	DATE	DESC.
1	11/22/21	STORMWATER DESIGN
2	11/30/21	GARAGE DOOR ACCESS

PREPARED FOR:
NORTHBRIDGE COMPANIES
71 THIRD AVENUE
BURLINGTON, MA 01803

BSC GROUP
33 Waldo Street
Worcester, Massachusetts
01608
508 792 4500

© 2021 BSC Group, Inc.

SCALE: 1" = 40'
0 20 40 80 FEET

FILE: WOR\6113600\C\D\6113600-CP3.dwg
DWG.:
JOB. NO: 6-1136.00
SHEET C-103

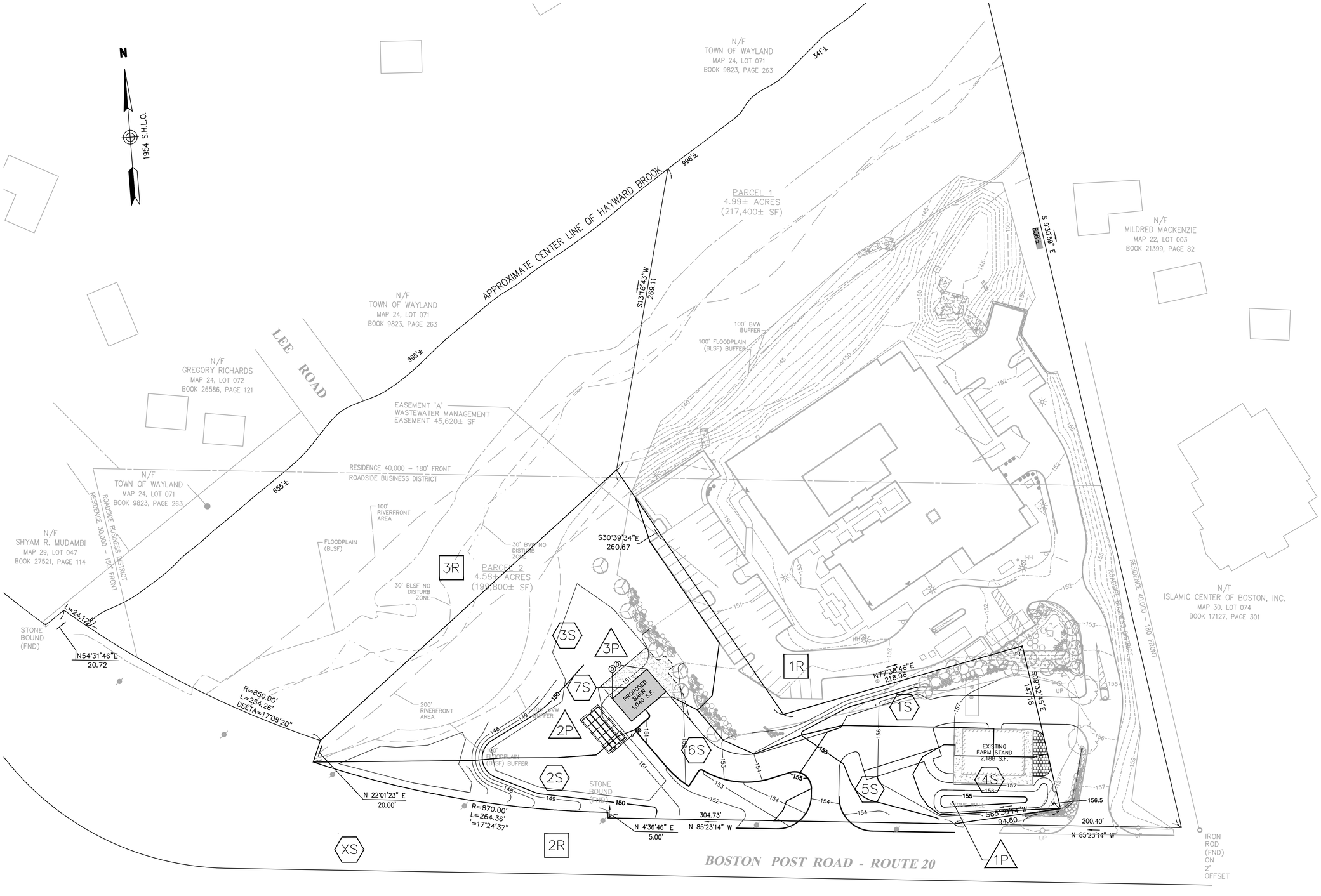

ISSUED FOR PERMITTING
NOT FOR CONSTRUCTION

COMMONWEALTH OF MASSACHUSETTS
BRIAN G. YERGATIAN
CIVIL
No. 45208
REGISTERED PROFESSIONAL ENGINEER

11/30/21

FOR THE BSC GROUP, INC. PROFESSIONAL ENGINEER — DATE

ROADSIDE FARM STAND

136 BOSTON POST ROAD

IN

WAYLAND
MASSACHUSETTS
(MIDDLESEX COUNTY)

POST-DEVELOPMENT WATERSHED PLAN

NOVEMBER 12, 2021

REVISIONS:

NO.	DATE	DESC.
1	11/22/21	STORMWATER DESIGN
2	11/30/21	GARAGE DOOR ACCESS

PREPARED FOR:
NORTHBRIDGE COMPANIES
71 THIRD AVENUE
BURLINGTON, MA 01803

BSC GROUP
33 Waldo Street
Worcester, Massachusetts
01608
508 792 4500

© 2021 BSC Group, Inc.

SCALE: 1" = 40'
0 20 40 80 FEET

FILE: WOR\6113600\C\D\6113600-CP3.dwg
DWG.:
JOB. NO: 6-1136.00
SHEET C-104

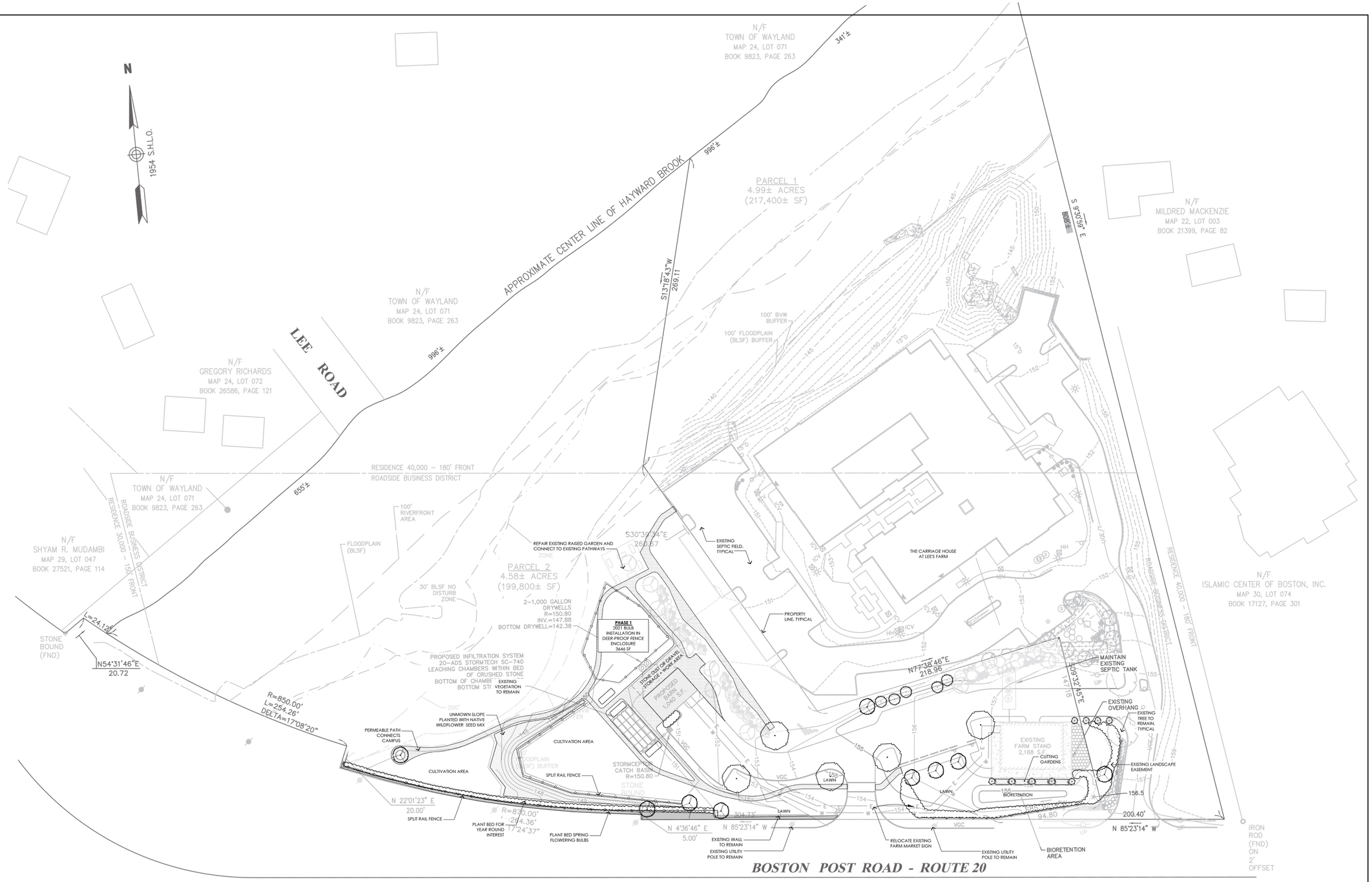

NOTE:

THE BASE PLAN USED FOR THIS CONCEPTUAL DESIGN IS A PLAN ENTITLED, "NORTHBRIDGE WAYLAND, 134 BOSTON POST ROAD, WAYLAND, MASSAHCUSETTS, GRADING, DRAINAGE, AND EROSION CONTROL PLAN", DRAWING NO. C–3, PREPARED BY STEPHENSON DESIGN GROUP, LLC, REVISED JULY 6, 2012.

ISSUED FOR PERMITTING
NOT FOR CONSTRUCTION

MASSACHUSETTS REBECCA A. BAGLEY NO. 1388 REGISTERED LANDSCAPE ARCHITECT

11/30/2021

FOR RBLA DESIGN LLC
REGISTERED LANDSCAPE ARCHITECT — DATE

ROADSIDE FARM STAND

136 BOSTON POST ROAD
IN
WAYLAND
MASSACHUSETTS
(MIDDLESEX COUNTY)

LANDSCAPE PLAN

NOVEMBER 30, 2021

REVISIONS:

NO.	DATE	DESC.

PREPARED FOR:
NORTHBRIDGE COMPANIES
71 THIRD AVENUE
BURLINGTON, MA 01803

rbla DESIGN
RBLA Design LLC
rbladesign.com
781.686.4486

SCALE: 0' 20' 40' 80'

FILE: d:\dropbox\rbla_shared\2117–wayland–farmstand
DWG: 2117–landscape
JOB NO: 2117
SHEET L-100

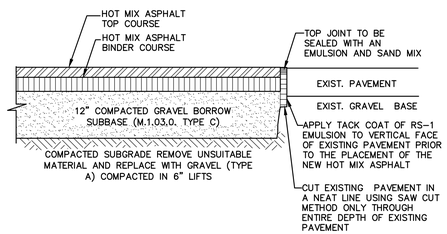

HOT MIX ASPHALT PAVEMENT JOINTS

SCALE: NONE

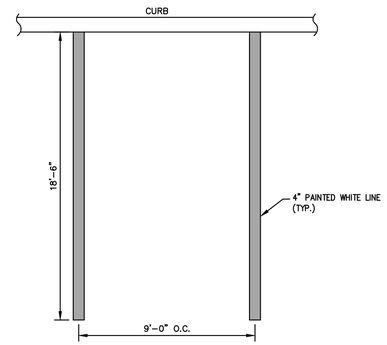

STANDARD PAINTED PARKING MARKINGS

SCALE: NONE

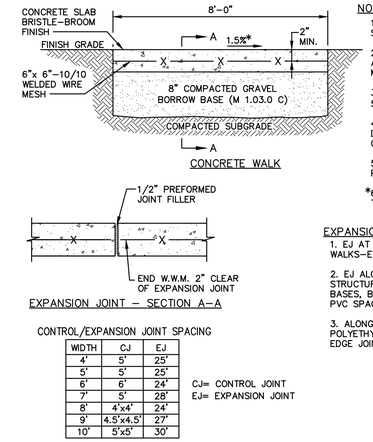

CONTROL/EXPANSION JOINT SPACING

WIDTH	CJ	EJ
4'	5'	25'
5'	5'	25'
6'	6'	24'
7'	5'	28'
8'	4'x4'	24'
9'	4.5'x4.5'	27'
10'	5'x5'	30'

CJ= CONTROL JOINT
EJ= EXPANSION JOINT

NOTES:

1. WALK TO 6" THICK IF SUBJECT TO VEHICULAR LOAD.
2. PROVIDE EXPANSION JOINTS AT MIN. 20 FT O.C. WITH PRE-MOULDED JOINT FILLER.
3. PROVIDE CONTROL JOINTS AT 5' O.C.
4. PROVIDE BROOM FINISH IN DIRECTION PERPENDICULAR TO CURB.
5. CONCRETE SHALL BE 4,000 PSI-TYPE II.

*6. CONSTRUCTION TOLERANCE = 0.5%.

EXPANSION JOINT NOTES:

1. EJ AT ALL INTERSECTIONS WALKS-EVENLY SPACE CJ BETWEEN EJ.
2. EJ ALONG ALL RETAINING WALLS, STRUCTURES, HANDICAP RAMPS, LIGHT BASES, BENCHES ETC.. USE REMOVABLE PVC SPACER & SILICONE JOINT FILLER.
3. ALONG GRANITE CURB PROVIDE POLYETHYLENE BOND BREAKER & TOOL EDGE JOINT.

CONCRETE WALKWAY

SCALE: NONE

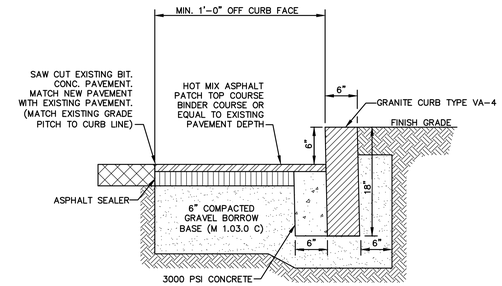

VERTICAL GRANITE CURB AT EXISTING ROADWAY

SCALE: NONE

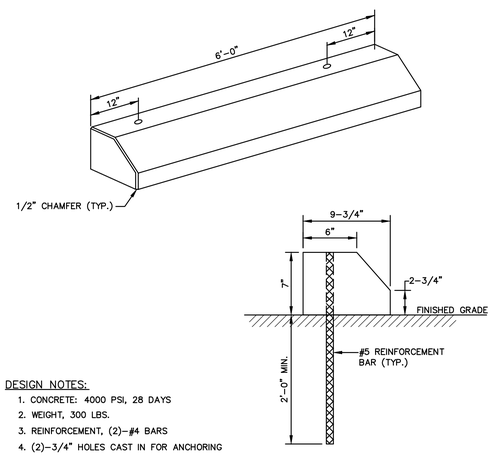

DESIGN NOTES:

1. CONCRETE: 4000 PSI, 28 DAYS
2. WEIGHT, 300 LBS.
3. REINFORCEMENT, (2)-#4 BARS
4. (2)-3/4" HOLES CAST IN FOR ANCHORING

PRECAST CONCRETE WHEEL STOP

SCALE: NONE

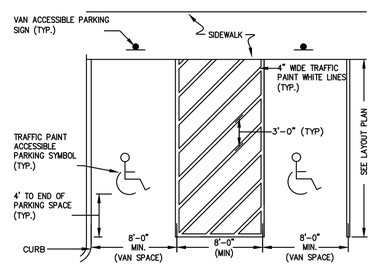

PAINTED PAVEMENT MARKINGS ACCESSIBLE VAN PARKING SPACES

SCALE: NONE

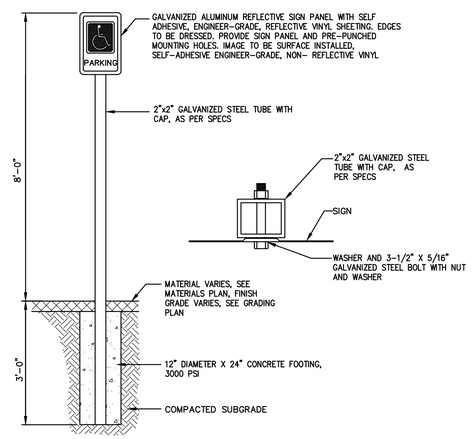

ACCESSIBLE PARKING SIGN

SCALE: NONE

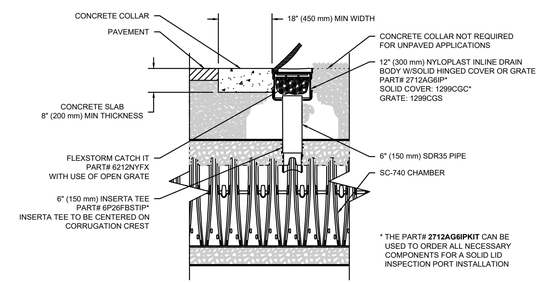

SC-740 INSPECTION PORT DETAIL

SCALE: NONE

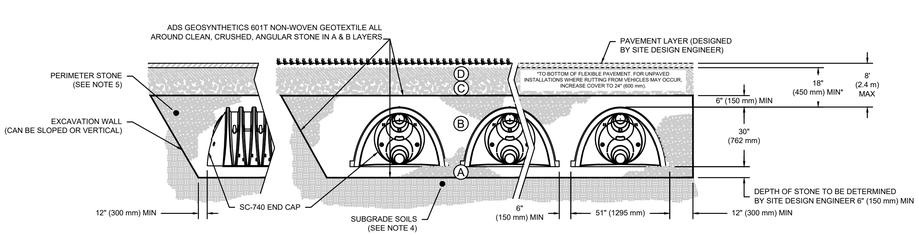

NOTES:

1. SC-740 CHAMBERS SHALL CONFORM TO THE REQUIREMENTS OF ASTM F2418 "STANDARD SPECIFICATION FOR POLYPROPYLENE (PP) CORRUGATED WALL STORMWATER COLLECTION CHAMBERS", OR ASTM F2922 "STANDARD SPECIFICATION FOR POLYETHYLENE (PE) CORRUGATED WALL STORMWATER COLLECTION CHAMBERS".
2. SC-740 CHAMBERS SHALL BE DESIGNED IN ACCORDANCE WITH ASTM F2787 "STANDARD PRACTICE FOR STRUCTURAL DESIGN OF THERMOPLASTIC CORRUGATED WALL STORMWATER COLLECTION CHAMBERS".
3. "ACCEPTABLE FILL MATERIALS" TABLE ABOVE PROVIDES MATERIAL LOCATIONS, DESCRIPTIONS, GRADATIONS, AND COMPACTION REQUIREMENTS FOR FOUNDATION, EMBEDMENT, AND FILL MATERIALS.
4. THE SITE DESIGN ENGINEER IS RESPONSIBLE FOR ASSESSING THE BEARING RESISTANCE (ALLOWABLE BEARING CAPACITY) OF THE SUBGRADE SOILS AND THE DEPTH OF FOUNDATION STONE WITH CONSIDERATION FOR THE RANGE OF EXPECTED SOIL MOISTURE CONDITIONS.
5. PERIMETER STONE MUST BE EXTENDED HORIZONTALLY TO THE EXCAVATION WALL FOR BOTH VERTICAL AND SLOPED EXCAVATION WALLS.
6. ONCE LAYER 'C' IS PLACED, ANY SOIL/MATERIAL CAN BE PLACED IN LAYER 'D' UP TO THE FINISHED GRADE. MOST PAVEMENT SUBBASE SOILS CAN BE USED TO REPLACE THE MATERIAL REQUIREMENTS OF LAYER 'C' OR 'D' AT THE SITE DESIGN ENGINEER'S DISCRETION.

SC-740 CROSS SECTION DETAIL

SCALE: NONE

ISSUED FOR PERMITTING
NOT FOR CONSTRUCTION

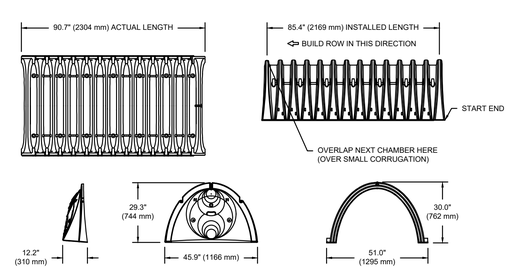

NOMINAL CHAMBER SPECIFICATIONS		
SIZE (W X H X INSTALLED LENGTH)	51.0" X 30.0" X 85.4"	(1295 mm X 762 mm X 2169 mm)
CHAMBER STORAGE	45.9 CUBIC FEET	(1.30 m^3)
MINIMUM INSTALLED STORAGE*	74.9 CUBIC FEET	(2.12 m^3)
WEIGHT	75.0 lbs.	(33.6 kg)

*ASSUMES 6" (152 mm) STONE ABOVE, BELOW, AND BETWEEN CHAMBERS

PRE-FAB STUBS AT BOTTOM OF END CAP FOR PART NUMBERS ENDING WITH "B"
PRE-FAB STUBS AT TOP OF END CAP FOR PART NUMBERS ENDING WITH "T"
PRE-CORED END CAPS END WITH "PC"

PART #	STUB	A	B	C
SC740EPE12T / SC740EPE12TPC	12" (300 mm)	14.7" (373 mm)	12.5" (318 mm)	---
SC740EPE12B / SC740EPE12BPC			---	1.2" (30 mm)

SC-740 TECHNICAL SPECIFICATIONS

SCALE: NONE

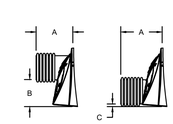

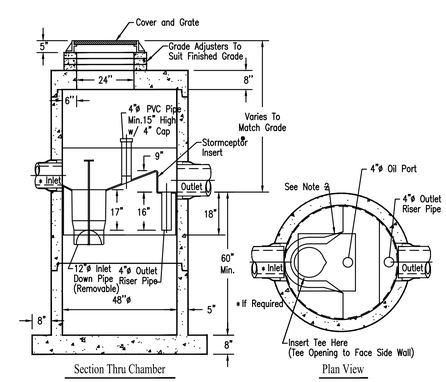

Notes:

1. The Use Of Flexible Connection is Recommended at The Inlet and Outlet Where Applicable.
2. The Cover Should be Positioned Over The Inlet Drop Pipe and The Oil Port.
3. The Stormceptor System is protected by one or more of the following U.S. Patents: #4985148, #5498331, #5725760, #5753115, #5849181, #6068765, #6371690.
4. Contact a Concrete Pipe Division representative for further details not listed on this drawing.

STORMCEPTOR STC 450i

SCALE: NONE

COMMONWEALTH OF MASSACHUSETTS
BRIAN G. YERGATIAN
CIVIL
No. 46308
REGISTERED PROFESSIONAL ENGINEER

11/30/21

FOR THE BSC GROUP, INC. PROFESSIONAL ENGINEER — DATE

ROADSIDE FARM STAND

136 BOSTON POST ROAD
IN
WAYLAND
MASSACHUSETTS
(MIDDLESEX COUNTY)

DETAILS

NOVEMBER 12, 2021

REVISIONS:

NO.	DATE	DESC.
1	11/22/21	STORMWATER DESIGN
2	11/30/21	GARAGE DOOR ACCESS

PREPARED FOR:
NORTHBRIDGE COMPANIES
71 THIRD AVENUE
BURLINGTON, MA 01803

BSC GROUP
33 Waldo Street
Worcester, Massachusetts
01608
508 792 4500

© 2021 BSC Group, Inc.

SCALE: 1" = 40'
0 20 40 80 FEET

FILE: WOR\6113600\C\D\6113600-CP3.dwg
DWG.:
JOB. NO: 6-1136.00
SHEET C-200